PIN #	COLOR
1	GREEN / YELLOW
2	BLACK
3	WHITE

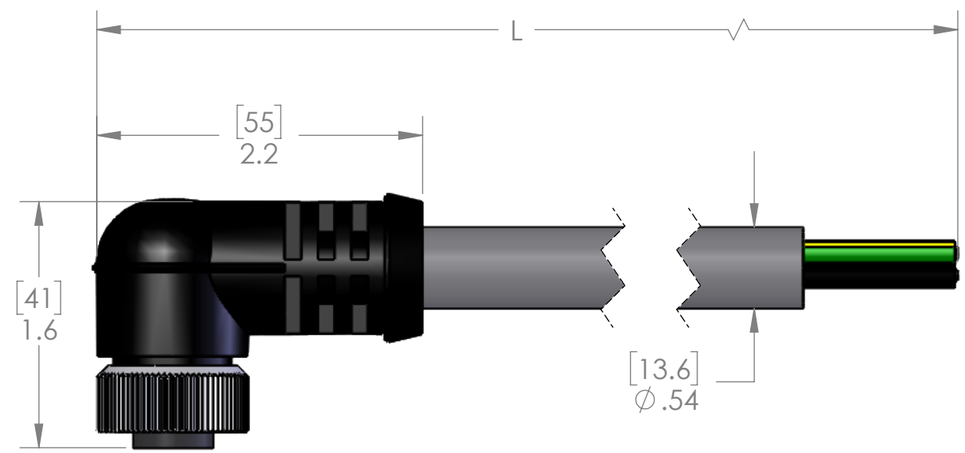

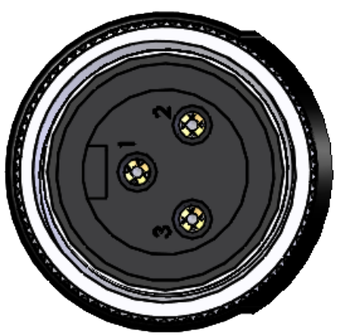

DETAIL A
SCALE 2 : 1

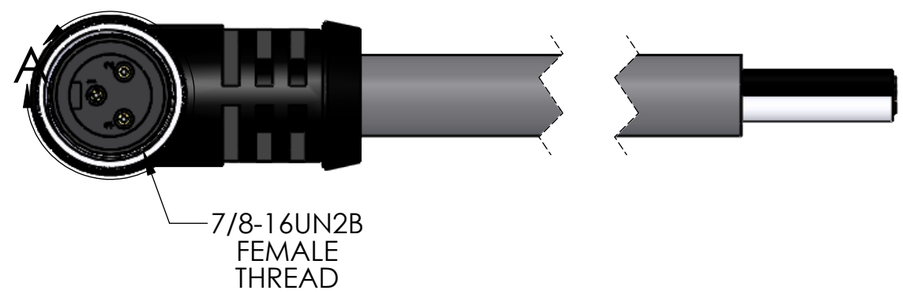

TABLE A		
P/N	L	STD?
MINH-3FP-1M-R	40" [1.0m]	YES
MINH-3FP-2M-R	79" [2.0m]	YES
MINH-3FP-3M-R	118" [3.0m]	NO
MINH-3FP-4M-R	157" [4.0m]	YES
MINH-3FP-5M-R	197" [5.0m]	YES
MINH-3FP-6M-R	238" [6.0m]	NO
MINH-3FP-10M-R	393" [10m]	YES

PARTS LISTED AS NOT BEING STANDARD
MAY HAVE MINIMUM ORDER QUANTITIES

MATERIALS	
BODY:	BLACK PVC
CONTACTS:	GOLD PLATED COPPER ALLOY
CABLE:	14/3 STOOW, GRAY JACKET
COUPLING:	NICKEL PLATED BRASS

APPROVALS:	
US	UL LISTED
CANADA	C-UL LISTED

PROPRIETARY AND CONFIDENTIAL
THE INFORMATION CONTAINED IN THIS DRAWING IS THE SOLE PROPERTY OF MENCOM CORPORATION. ANY REPRODUCTION IN PART OR AS A WHOLE WITHOUT THE WRITTEN PERMISSION OF MENCOM CORPORATION IS PROHIBITED.

VOLTS	600V
AMPS	18A
TEMP:	105°C

UNLESS OTHERWISE SPECIFIED:
DIMENSIONS ARE IN INCHES AND [MM]

MATERIAL
FINISH
DO NOT SCALE DRAWING

DRAWN BY	ADM
DRAWN DATE	09/22/2016
CHECKED BY	
CHECK DATE	

COMMENTS:

MENCOM CORPORATION

TITLE:

SIZE	DWG. NO.	REV
B	MINH-3FP-ZZ-R	B
SCALE: 1:1	WEIGHT:	SHEET 1 OF 1