PIN #	COLOR	AWG
1	GRAY / PINK	22
2	WHITE / GREEN	22
3	WHITE / YELLOW	22
4	BROWN	18
5	BROWN / YELLOW	22
6	BLUE	18
7	YELLOW	22
8	GREEN	22
9	PINK	22
10	WHITE	22
11	RED / BLUE	22
12	BROWN / GREEN	22
13	GRAY	22
14	RED	22

REVISIONS			
REV.	DESCRIPTION	DATE	APPROVED
A	redrawn in SolidWorks	6/23/2011	DCT
B	CHG OVERMOLD TO BLACK PUR	2/6/2013	DCT

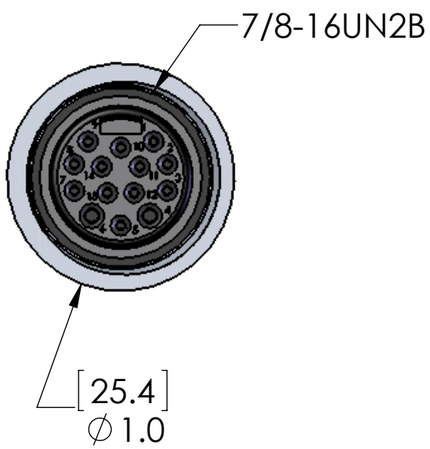

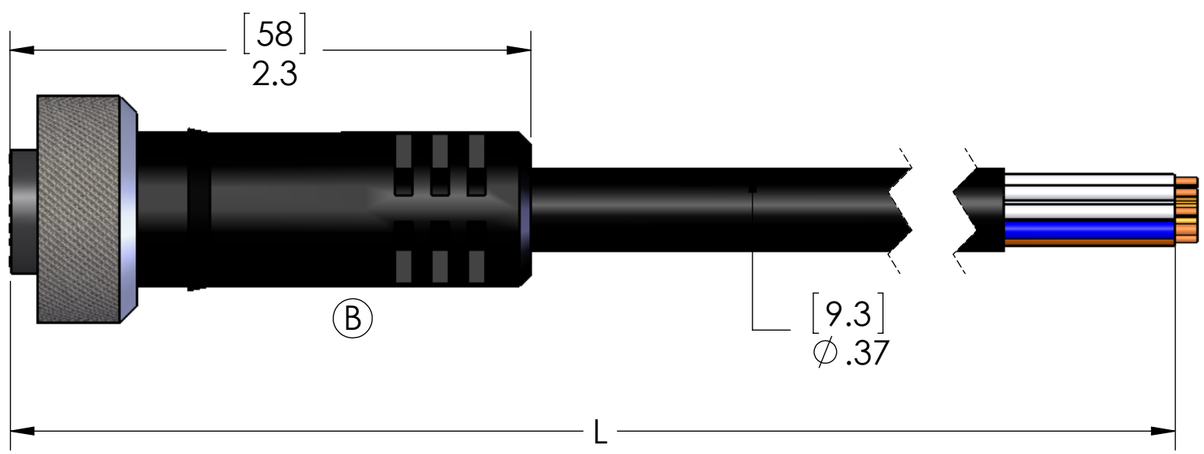

TABLE A	
P/N	L
MINP-14FP-1M	40" [1m]
MINP-14FP-2M	79" [2m]
MINP-14FP-3M	118" [3m]
MINP-14FP-4M	157" [4m]
MINP-14FP-5M	197" [5m]
MINP-14FP-6M	236" [6m]
MINP-14FP-8M	315" [8m]
MINP-14FP-10M	393" [10m]
MINP-14FP-15M	590" [15m]
MINP-14FP-20M	786" [20m]

MATERIALS	
BODY:	BLACK PUR
CONTACTS:	GOLD PLATED COPPER ALLOY
CABLE:	22/12, 18/2 BLACK PUR JACKET
COUPLING:	ANODIZED ALUMINUM
INSERT:	POLYAMIDE
O-RING:	NBR

B

PROPRIETARY AND CONFIDENTIAL

THE INFORMATION CONTAINED IN THIS DRAWING IS THE SOLE PROPERTY OF MENCOM CORPORATION. ANY REPRODUCTION IN PART OR AS A WHOLE WITHOUT THE WRITTEN PERMISSION OF MENCOM CORPORATION IS PROHIBITED.

VOLTS	300V
AMPS	2A & 8A
TEMP	80°C

SPECIFICATIONS

UNLESS OTHERWISE SPECIFIED:

DIMENSIONS ARE IN INCHES AND [MM]

MATERIAL

FINISH

DO NOT SCALE DRAWING

	NAME
DRAWN	BEM
CHECKED	
ENG APPR.	
MFG APPR.	
Q.A.	

COMMENTS:

MENCOM CORPORATION

TITLE:

SIZE	DWG. NO.	REV
B	MINP-14FP-ZZ	B

SCALE: 3:2 | WEIGHT: | SHEET 1 OF 1