| PIN # | COLOR |
|---|---|
| | |
| 1 | WHITE w/BLACK |
| 2 | BLACK |
| 3 | WHITE |
| 4 | RED |
| 5 | ORANGE |
| 6 | BLUE |
| 7 | GREEN/YELLOW |

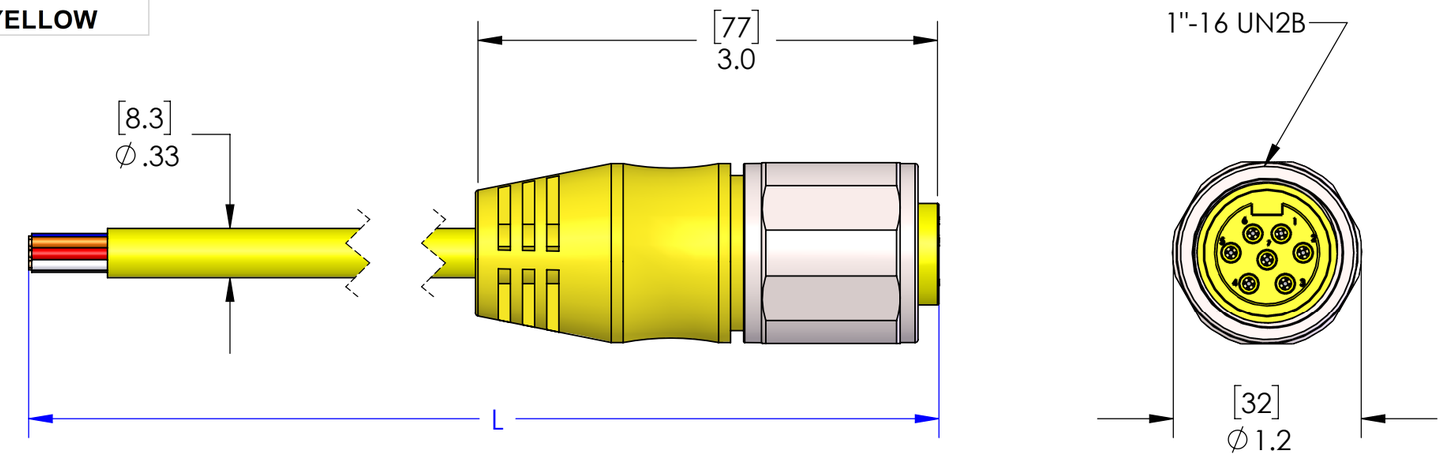


| P/N | L | STD? |
|---|---|---|
| | | |
| MINP-7FPX-3-SS | 36" [0.9m] | YES |
| MINP-7FPX-6-SS | 72" [1.8m] | YES |
| MINP-7FPX-12-SS | 144" [3.7m] | YES |
| MINP-7FPX-15-SS | 180" [4.6m] | NO |
| MINP-7FPX-20-SS | 240" [6.1m] | YES |
| MINP-7FPX-30-SS | 360" [9.1m] | YES |
| MINP-7FPX-40-SS | 480" [12.2m] | NO |
| MINP-7FPX-50-SS | 600" [15.2m] | NO |
| MINP-7FPX-60-SS | 720" [18.3m] | NO |
| MINP-7FPX-100-SS | 1200" [30.5m] | NO |

PARTS LISTED AS NOT BEING STANDARD
MAY HAVE MINIMUM ORDER QUANTITIES

| MATERIALS | |
|---|---|
| BODY: | YELLOW PUR |
| CONTACTS: | GOLD PLATED COPPER ALLOY |
| CABLE: | |
| STYLE: | AWM |
| AWG: | 18 AWG |
| JACKET: | YELLOW PUR |
| VOLTAGE: | 300V |
| SHIELD: | NO |
| COUPLING: | STAINLESS STEEL |
| INSERT: | YELLOW PVC |
| O-RING: | N/A |
| | |
| APPROVALS | |
| US: | UL LISTED |
| CANADA: | C-UL LISTED |
| ROHS: | YES |
| CE: | YES |
| | |
| RATINGS | |
| PROTECTION CLASS: | UL TYPE 4 & 12, IEC IP69 |


**PROPRIETARY AND CONFIDENTIAL**
THE INFORMATION CONTAINED IN THIS DRAWING IS THE SOLE PROPERTY OF MENCOM CORPORATION. ANY REPRODUCTION IN PART OR AS A WHOLE WITHOUT THE WRITTEN PERMISSION OF MENCOM CORPORATION IS PROHIBITED.


| | |
|---|---|
| VOLTS | 300V |
| AMPS | 5A |
| TEMP: | 80°C |

UNLESS OTHERWISE SPECIFIED:
DIMENSIONS ARE IN INCHES AND [MM]

MATERIAL
FINISH
DO NOT SCALE DRAWING

| | |
|---|---|
| DRAWN BY | JJH |
| DRAWN DATE | 07/11/2022 |
| CHECKED BY | ADM |
| CHECK DATE | 07/11/2022 |

COMMENTS:

MENCOM CORPORATION

TITLE:

| SIZE | DWG. NO. | REV |
|---|---|---|
| B | MINP-7FPX-ZZ-SS | A |
| SCALE: 1:2 | WEIGHT: | SHEET 1 OF 1 |