PIN #	COLOR
A	GREEN/YELLOW
B	BLACK
C	WHITE

REVISIONS			
REV.	DESCRIPTION	DATE	APPROVED
X	PRELIMINARY	1/13/2016	

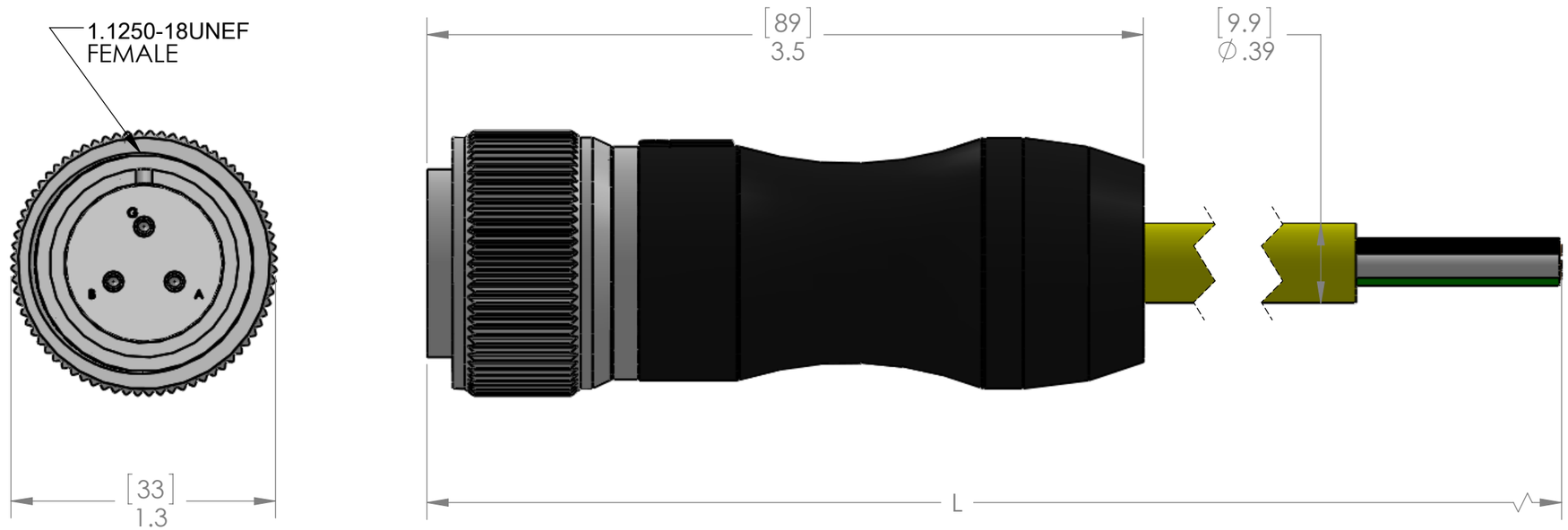

P/N	L
MS18-3FP-1M	40" [1m]
MS18-3FP-2M	79" [2m]
MS18-3FP-3M	117" [3m]
MS18-3FP-4M	157" [4m]
MS18-3FP-5M	197" [5m]
MS18-3FP-6M	236" [6m]
MS18-3FP-8M	315" [8m]
MS18-3FP-10M	393" [10m]
MS18-3FP-15M	590" [15m]

MATERIALS	
SHELLS:	NICKEL PLATED ALUMINUM
CONTACTS:	SILVER PLATED COPPER ALLOY
OVERMOLD:	BLACK PVC
CABLE:	16/3 STOOW YELLOW PVC
GASKET:	TPE

PROPRIETARY AND CONFIDENTIAL

THE INFORMATION CONTAINED IN THIS DRAWING IS THE SOLE PROPERTY OF MENCOM CORPORATION. ANY REPRODUCTION IN PART OR AS A WHOLE WITHOUT THE WRITTEN PERMISSION OF MENCOM CORPORATION IS PROHIBITED.

VOLTS	600V
AMPS	13A
TEMP	105C

SPECIFICATIONS

UNLESS OTHERWISE SPECIFIED:

DIMENSIONS ARE IN INCHES AND [MM]

MATERIAL

FINISH

DO NOT SCALE DRAWING

	NAME
DRAWN	JJH
CHECKED	
ENG APPR.	
MFG APPR.	
Q.A.	

COMMENTS:

MENCOM CORPORATION

TITLE:

3 PL FEM MS18 PLG

SIZE	DWG. NO.	REV
B	MS18-3FP-ZZ	X

SCALE: 1.5:1 | WEIGHT: | SHEET 1 OF 1