PIN #	COLOR
1	BROWN
3	BLUE
4	BLACK

REVISIONS			
REV.	DESCRIPTION	DATE	APPROVED
A	DRAWN IN SWB3	9/17/2015	BEM

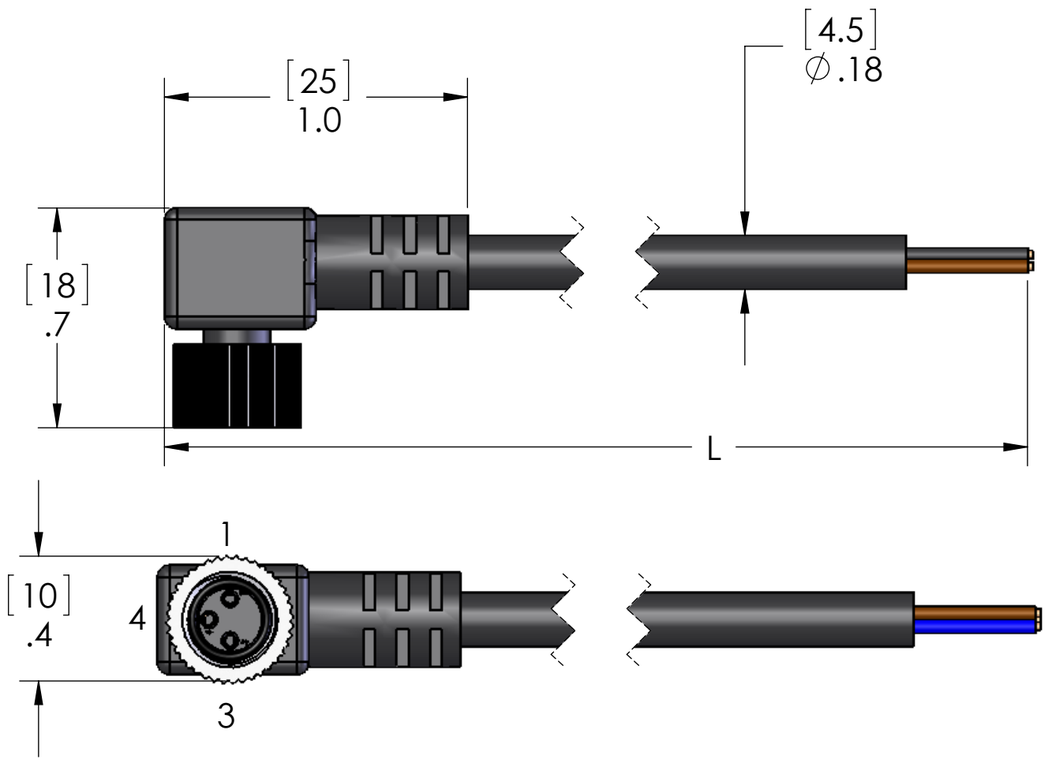

TABLE A		
P/N	L	STD?
NAN-T-3FP-0.5M-R	19" [0.5M]	NO
NAN-T-3FP-1M-R	40" [1M]	YES
NAN-T-3FP-2M-R	79" [2M]	YES
NAN-T-3FP-3M-4	118" [3M]	NO
NAN-T-3FP-4M-R	157" [4M]	YES
NAN-T-3FP-5M-R	197" [5M]	YES
NAN-T-3FP-6M-R	236" [6M]	NO
NAN-T-3FP-8M-R	315" [8M]	NO
NAN-T-3FP-10M-R	393" [10M]	YES
NAN-T-3FP-15M-R	590" [15M]	NO
NAN-T-3FP-20M-R	786" [20M]	NO

PARTS LISTED AS NOT BEING STANDARD
MAY HAVE MINIMUM ORDER QUANTITIES

MATERIALS	
BODY:	BLACK PVC
CONTACTS:	GOLD PLATED COPPER ALLOY
CABLE:	24/3 AWM 2661 BLACK PVC JACKET
COUPLING:	NICKEL PLATED BRASS
INSERT:	POLYAMIDE
O-RING:	BUNA-N

PROPRIETARY AND CONFIDENTIAL
THE INFORMATION CONTAINED IN THIS DRAWING IS THE SOLE PROPERTY OF MENCOM CORPORATION. ANY REPRODUCTION IN PART OR AS A WHOLE WITHOUT THE WRITTEN PERMISSION OF MENCOM CORPORATION IS PROHIBITED.

VOLTS	60V
AMPS	3A
TEMP	105C
APPLICATION	

UNLESS OTHERWISE SPECIFIED:
DIMENSIONS ARE IN INCHES AND [MM]
INTERPRET GEOMETRIC TOLERANCING PER:
MATERIAL
FINISH
DO NOT SCALE DRAWING

	NAME
DRAWN	JJH
CHECKED	
ENG APPR.	
MFG APPR.	
Q.A.	
COMMENTS:	

MENCOM CORPORATION

TITLE:
R/A FEM 3 POLE NAN

SIZE	DWG. NO.	REV
B	NAN-T-3FP-ZZ-R	A

SCALE: 1:1 | WEIGHT: | SHEET 1 OF 1