PIN#	COLOR
1	BROWN
2	WHITE
3	BLUE
4	BLACK

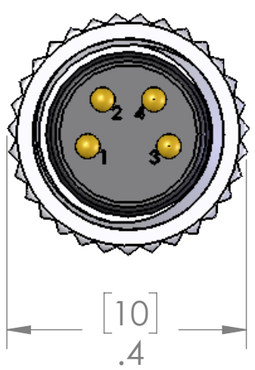

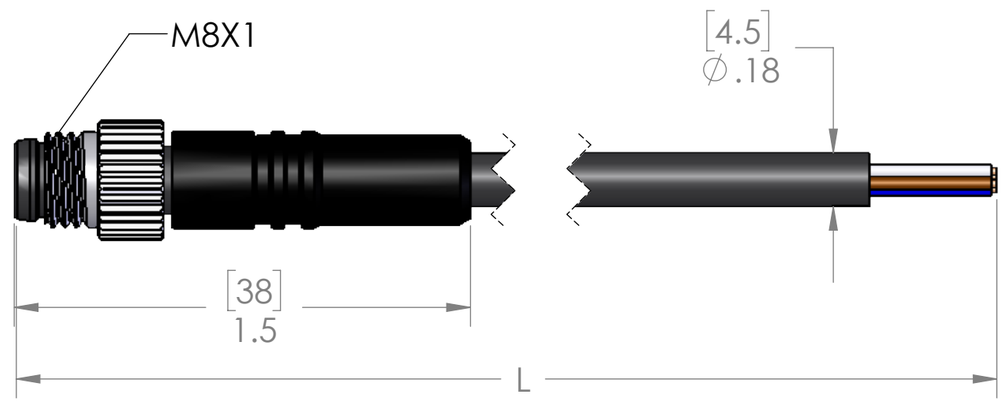

TABLE A		
P/N	L	STD?
NAN-T-4MP-0.5M	19" [.5M]	NO
NAN-T-4MP-1M	40" [1M]	YES
NAN-T-4MP-2M	79" [2M]	YES
NAN-T-4MP-3M	118" [3M]	NO
NAN-T-4MP-4M	157" [4M]	NO
NAN-T-4MP-5M	197" [5M]	YES
NAN-T-4MP-6M	236" [6M]	NO
NAN-T-4MP-8M	315" [8M]	NO
NAN-T-4MP-10M	393" [10M]	YES
NAN-T-4MP-15M	590" [15M]	YES
NAN-T-4MP-20M	786" [20M]	NO

PARTS LISTED AS NOT BEING STANDARD
MAY HAVE MINIMUM ORDER QUANTITIES

MATERIALS:	
BODY:	BLACK POLYAMIDE/PVC BLEND
INSERT:	POLYAMIDE
CONTACTS:	GOLD PLATED COPPER ALLOY
COUPLING:	NICKEL PLATED BRASS
CABLE:	24/4 BLACK PVC

PROPRIETARY AND CONFIDENTIAL

THE INFORMATION CONTAINED IN THIS DRAWING IS THE SOLE PROPERTY OF MENCOM CORPORATION. ANY REPRODUCTION IN PART OR AS A WHOLE WITHOUT THE WRITTEN PERMISSION OF MENCOM CORPORATION IS PROHIBITED.

VOLTS	60V
AMPS	3A
TEMP:	105°C

UNLESS OTHERWISE SPECIFIED:

DIMENSIONS ARE IN INCHES AND [MM]

MATERIAL

FINISH

DO NOT SCALE DRAWING

DRAWN BY	JJH
DRAWN DATE	03/29/2018
CHECKED BY	DWM
CHECK DATE	04/02/2018

COMMENTS:

MENCOM CORPORATION

TITLE:

SIZE	DWG. NO.	REV
B	NAN-T-4MP-ZZ	A
SCALE: 1:1	WEIGHT:	SHEET 1 OF 1