REVISIONS			
REV.	DESCRIPTION	DATE	APPROVED
A	DRAWN IN SW	1/14/2016	JJH
B	UPDATED CAD	4/15/2016	BEM

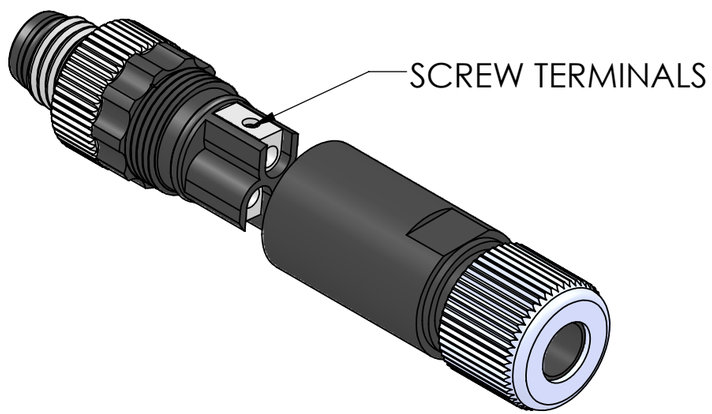

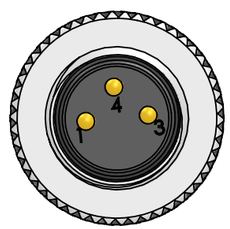

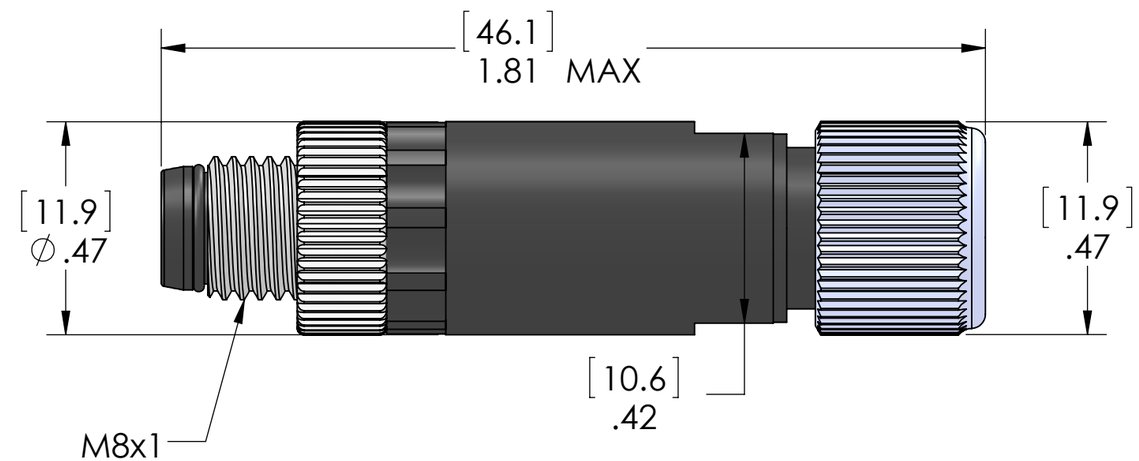

MATERIALS:	
BODY:	POLYAMIDE
COUPLINGS:	NICKEL PLATED BRASS
CONTACTS:	GOLD PLATED COPPER ALLOY
GROMMET:	NBR
O-RING:	NBR
SPECIFICATIONS:	
WIRE RANGE:	20-26AWG [0.5 - 0.14sqmm]
CABLE RANGE:	0.118 - 0.197 [3 - 5mm]
CONNECTION:	SCREW TERMINALS
VOLTS:	30V
AMPS:	3A
SEAL:	IP67
TEMP RANGE:	STATIC: -40°C - +85°C
	DYNAMIC: -20°C -+85°C

PROPRIETARY AND CONFIDENTIAL

THE INFORMATION CONTAINED IN THIS DRAWING IS THE SOLE PROPERTY OF MENCOM CORPORATION. ANY REPRODUCTION IN PART OR AS A WHOLE WITHOUT THE WRITTEN PERMISSION OF MENCOM CORPORATION IS PROHIBITED.

UNLESS OTHERWISE SPECIFIED:

DIMENSIONS ARE IN INCHES AND [MM]

MATERIAL

FINISH

DO NOT SCALE DRAWING

	NAME
DRAWN	CAM
CHECKED	
ENG APPR.	
MFG APPR.	
Q.A.	

COMMENTS:

MENCOM CORPORATION

TITLE:

3 PL SCRW TERM FW NAN

SIZE	DWG. NO.	REV
B	NAN-T-3MP-FW-ST	B

SCALE: 3:1 | WEIGHT: | SHEET 1 OF 1