PIN #	COLOR
1	BROWN
2	WHITE
3	BLUE
4	BLACK
5	GRAY
6	PINK

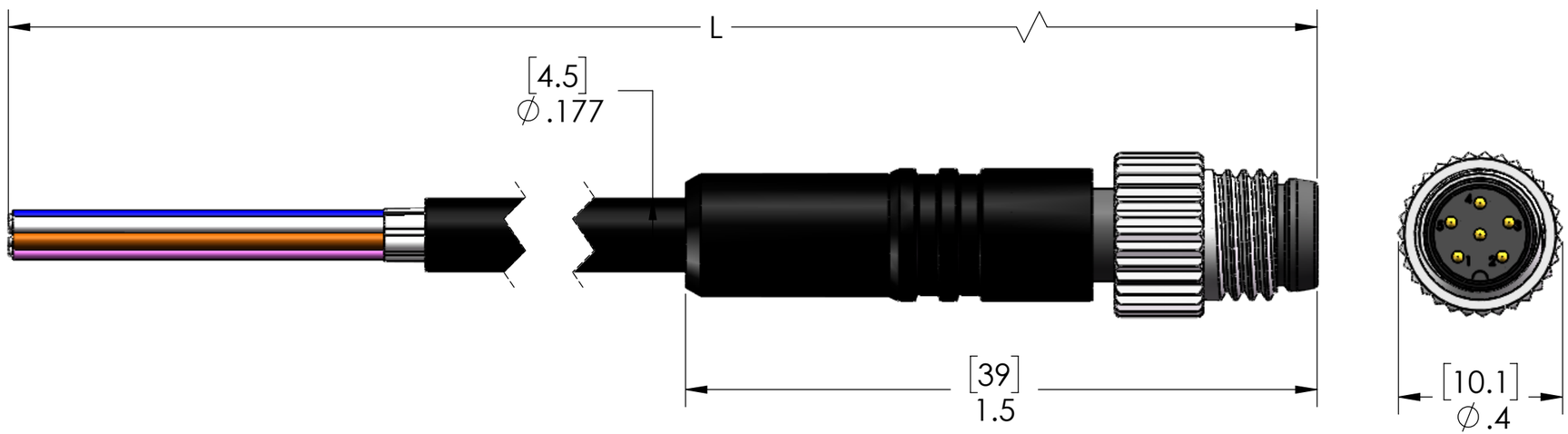

TABLE A

P/N	L
NAN-T-6MP-0.5M	19"[.5M]
NAN-T-6MP-1M	40"[1M]
NAN-T-6MP-2M	79"[2M]
NAN-T-6MP-3M	118"[3M]
NAN-T-6MP-4M	157"[4M]
NAN-T-6MP-5M	197"[5M]
NAN-T-6MP-6M	236"[6M]
NAN-T-6MP-8M	315"[8M]
NAN-T-6MP-10M	393"[10M]
NAN-T-6MP-15M	590"[15M]
NAN-T-6MP-20M	786"[20M]

MATERIALS	
BODY:	BLACK PVC
CONTACTS:	GOLD PLATED COPPER ALLOY
CABLE:	26/6 BLACK PVC JACKET
COUPLING:	NICKEL PLATED BRASS
INSERT:	POLYAMIDE

PROPRIETARY AND CONFIDENTIAL

THE INFORMATION CONTAINED IN THIS DRAWING IS THE SOLE PROPERTY OF MENCOM CORPORATION. ANY REPRODUCTION IN PART OR AS A WHOLE WITHOUT THE WRITTEN PERMISSION OF MENCOM CORPORATION IS PROHIBITED.

VOLTS	60V
AMPS	2A
TEMP:	105C

UNLESS OTHERWISE SPECIFIED:

DIMENSIONS ARE IN INCHES AND [MM]

MATERIAL

FINISH

DO NOT SCALE DRAWING

DRAWN BY	ADM
DRAWN DATE	02/16/2017
CHECKED BY	JJH
CHECK DATE	02/16/2017

COMMENTS:

MENCOM CORPORATION

TITLE:

6 PL NAN MAL PLG

SIZE	DWG. NO.	REV
B	NAN-T-6MP-ZZ	B

SCALE: 3:1 WEIGHT: SHEET 1 OF 1