PIN #	COLOR
1	BLACK
2	GREEN/YELLOW
3	WHITE

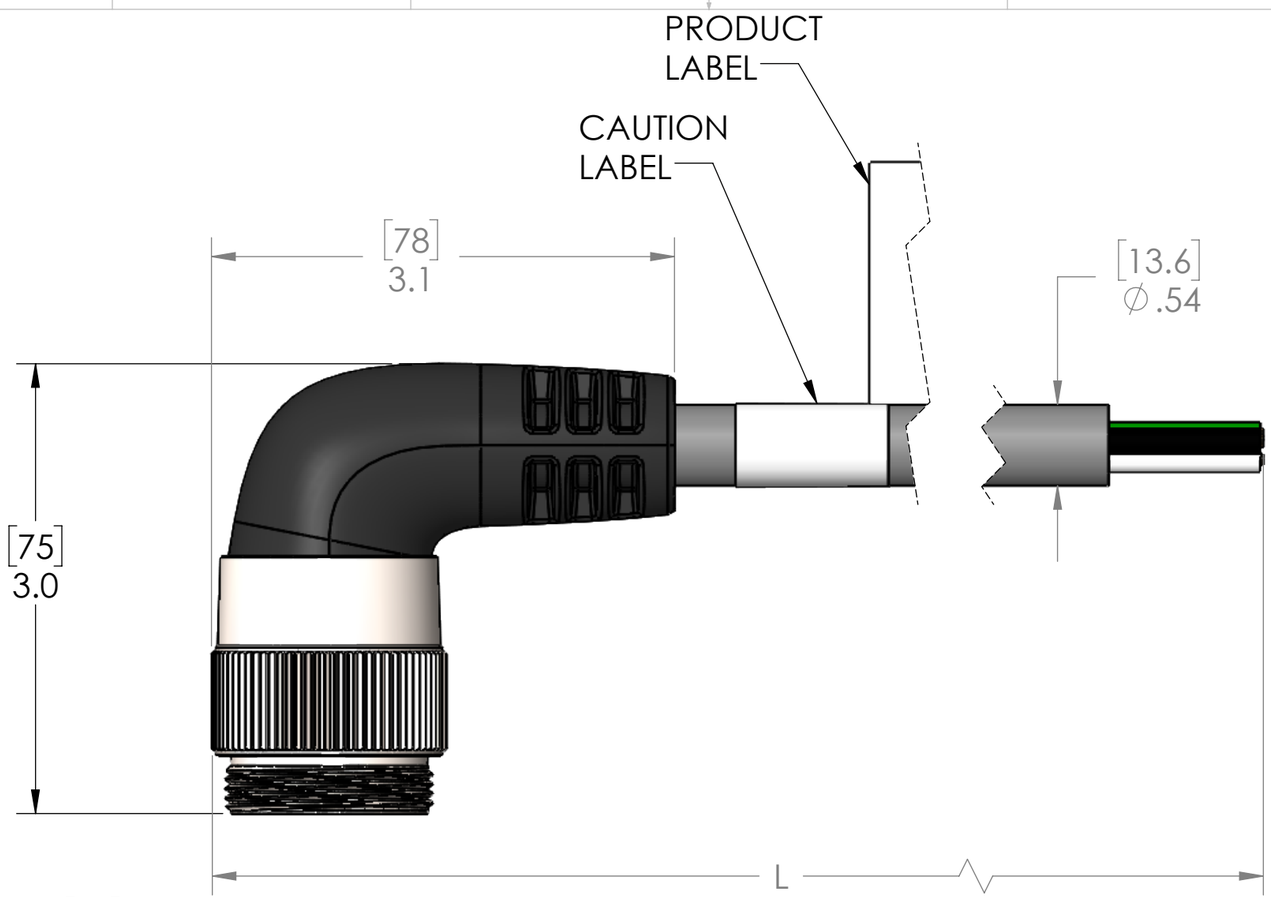

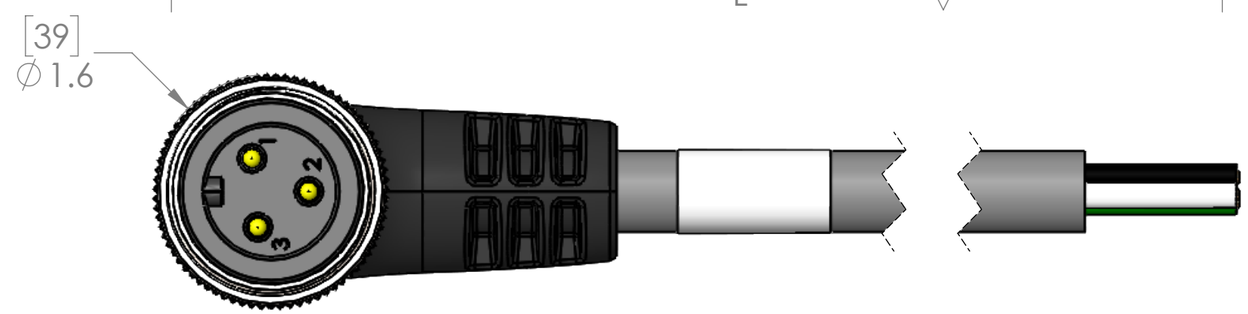

P/N	L	STD?
PMIN-34MP-1M-R	40" [1m]	YES
PMIN-34MP-2M-R	79" [2m]	YES
PMIN-34MP-3M-R	117" [3m]	NO
PMIN-34MP-4M-R	157" [4m]	YES
PMIN-34MP-5M-R	197" [5m]	YES
PMIN-34MP-6M-R	236" [6m]	NO
PMIN-34MP-8M-R	315" [8m]	NO
PMIN-34MP-10M-R	393" [10m]	YES
PMIN-34MP-15M-R	590" [15M]	YES

PARTS LISTED AS NOT BEING STANDARD
MAY REQUIRE MINIMUM ORDERS

MATERIALS	
BODY:	BLACK PVC
INSERT:	BLACK PVC
CONTACTS:	GOLD PLATED COPPER ALLOY
CABLE:	14/3 STOOW GRAY PVC
COUPLING:	NICKEL PLATED BRASS

RATINGS:	
SCCR RATING:	65kA Breakers and Fuses
RoHS COMPLIANT:	Yes
PROTECTION:	IP67
UL CATEGORY:	PVVA (US), PVVA7 (Canada)
U.S.	UL 2237 LISTED, File E469485
CANADA	C-UL 2237 LISTED, File E469485

CAUTION:

RISK OF ELECTRICAL SHOCK
DO NOT DISCONNECT UNDER LOAD

PROPRIETARY AND CONFIDENTIAL
THE INFORMATION CONTAINED IN THIS DRAWING IS THE SOLE PROPERTY OF MENCOM CORPORATION. ANY REPRODUCTION IN PART OR AS A WHOLE WITHOUT THE WRITTEN PERMISSION OF MENCOM CORPORATION IS PROHIBITED.

VOLTS	600V
AMPS	24A
TEMP:	-40° to 90°C

UNLESS OTHERWISE SPECIFIED:
DIMENSIONS ARE IN INCHES AND [MM]

MATERIAL
FINISH
DO NOT SCALE DRAWING

DRAWN BY	ADM
DRAWN DATE	06/23/2020
CHECKED BY	GO
CHECK DATE	06/23/2020

COMMENTS:

MENCOM CORPORATION

TITLE:
3 PL MAL R/A PLG PMIN 14AWG

SIZE	DWG. NO.	REV
B	PMIN-34MP-ZZ-R	C

SCALE: 1:1 WEIGHT: SHEET 1 OF 1