		WIRING		
CONN #1		CONN #2		CONN #3
1	---	1	---	1
2	---	2	---	4
3	---	3	---	3
4	---	4	---	2

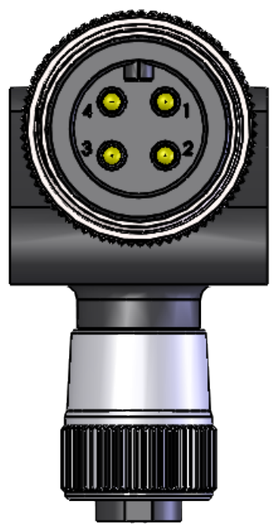

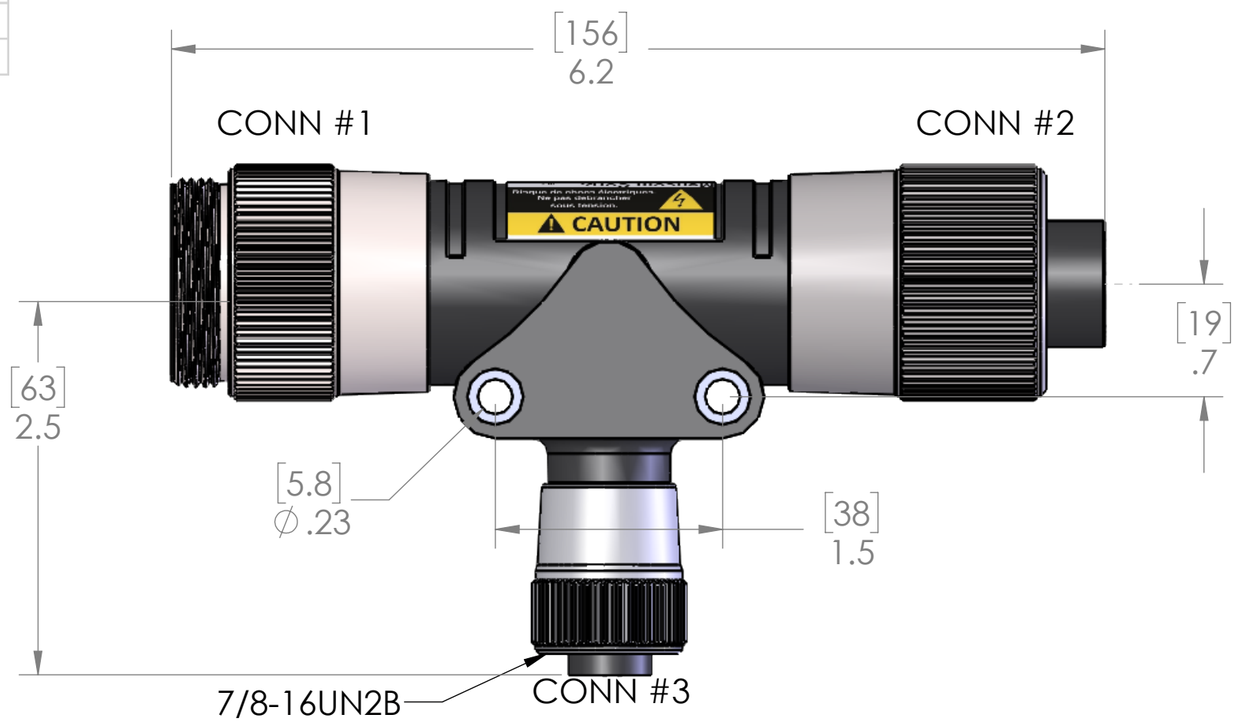

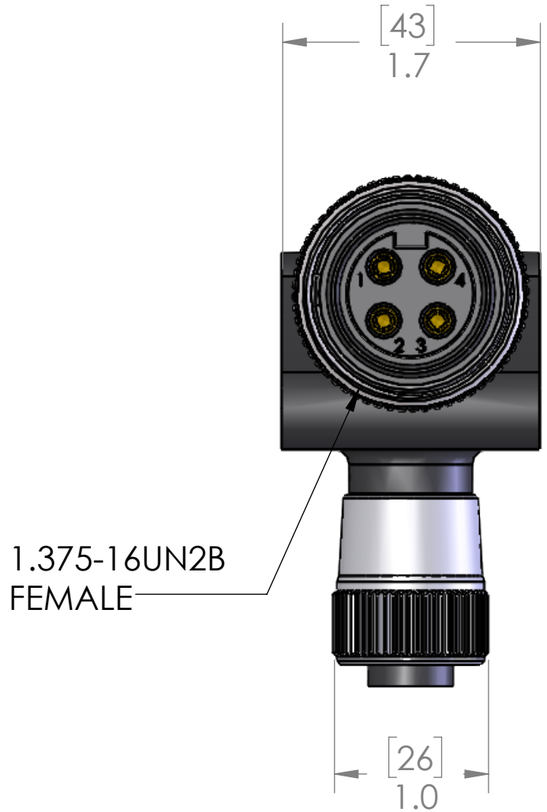

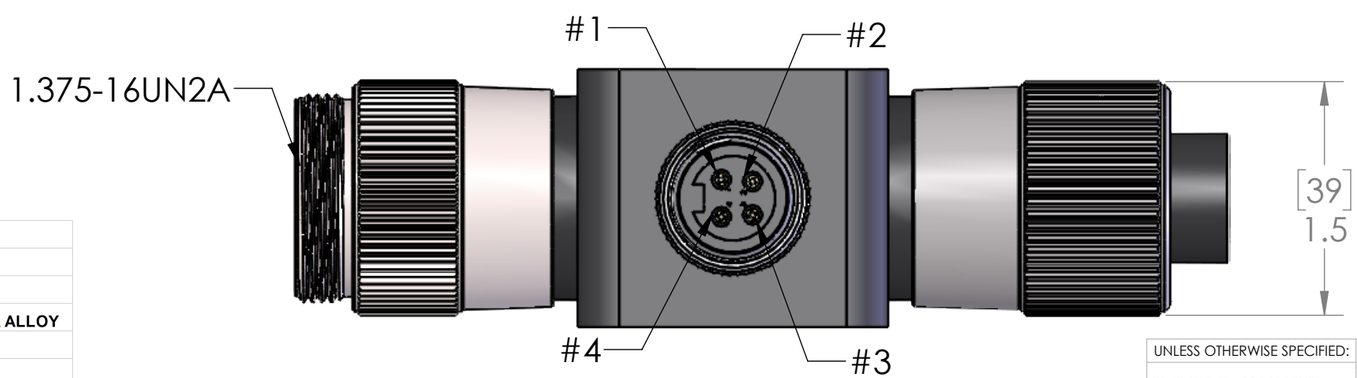

MATERIALS	
BODY:	BLACK PVC
CONTACTS:	GOLD PLATED COPPER ALLOY
INSERT:	BLACK PVC
COUPLING:	NICKEL PLATED BRASS
RATINGS:	
SCCR RATING:	5kA Breakers and Fuses
RoHS COMPLIANT:	Yes
PROTECTION:	IP67
UL CATEGORY:	PVVA (US), PVVA7 (Canada)
U.S.	UL 2237 LISTED, File E482233
CANADA	C-UL 2237 LISTED, File E482233

PROPRIETARY AND CONFIDENTIAL

THE INFORMATION CONTAINED IN THIS DRAWING IS THE SOLE PROPERTY OF MENCOM CORPORATION. ANY REPRODUCTION IN PART OR AS A WHOLE WITHOUT THE WRITTEN PERMISSION OF MENCOM CORPORATION IS PROHIBITED.

VOLTS	600V
AMPS	40A/15A
TEMP:	90°C

UNLESS OTHERWISE SPECIFIED:

DIMENSIONS ARE IN INCHES AND [MM]

MATERIAL

FINISH

DO NOT SCALE DRAWING

DRAWN BY	ADM
DRAWN DATE	04/21/2023
CHECKED BY	
CHECK DATE	

COMMENTS:

MENCOM CORPORATION

TITLE:

4 PL M-F-F PMIN T

SIZE	DWG. NO.	REV
B	PMINH-44MFF-T	C

SCALE: 1:1 WEIGHT: SHEET 1 OF 1