THIS COPY IS PROVIDED ON A RESTRICTED BASIS AND IS NOT TO BE USED IN ANY WAY DETRIMENTAL TO THE INTERESTS OF PANDUIT CORP.

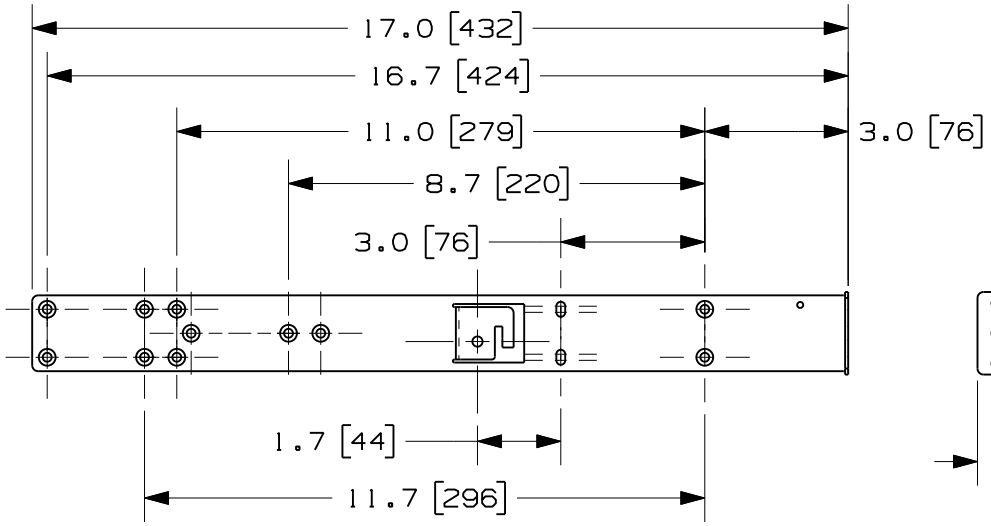

FRONT SUPPORT BRACKET
(LEFT SHOWN)

PANDUIT P/N	WEIGHT
R2PN3KB	1.5 LBS/EACH .7 Kg/EACH

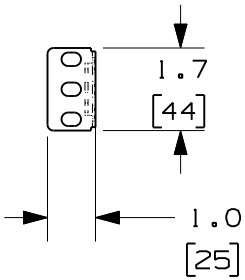

NOTES:
1. VISIT OUR ON-LINE CATALOG AT WWW.PANDUIT.COM FOR A CURRENT LIST OF PRODUCTS APPLICABLE FOR USE WITH THIS PART.
2. COMPONENTS:
   1- CISCO N3K MOUNT BRACKET SET
   2- PACK OF (4) #12-24 SCREWS
3. DIMENSIONS IN PARENTHESIS ARE METRIC.

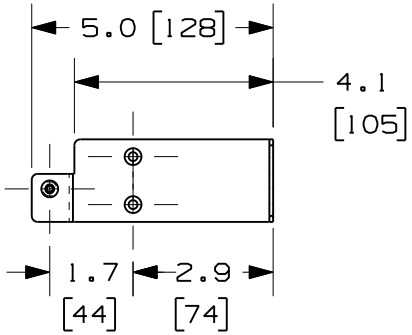

REAR SUPPORT BRACKET
(RIGHT AND LEFT)

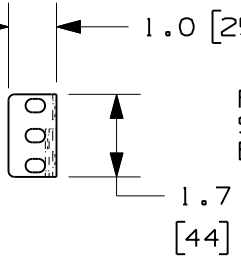

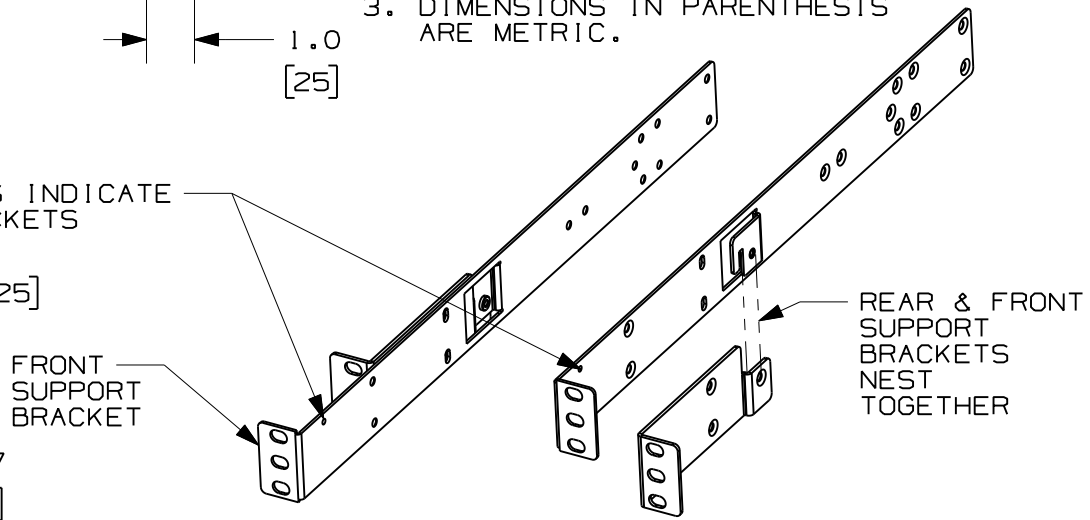

REV	DATE	BY	CHK	DESCRIPTION	ECN - R	CUST	SUP	OTH
00A	1-25-12	BAME	PM	DRAWING RELEASED	V10160JH-DC	CMK		

MODEL FILENAME: V10160JH/00

CAD FILENAME/LAYERS: V10160JH_DC/00A

PANDUIT CORP. TINLEY PARK, ILLINOIS

N3K MOUNT BRACKET ASSEMBLY
(R2PN3KB)
CUSTOMER DRAWING

UNLESS OTHERWISE SPECIFIED, DIMENSIONAL TOLERANCES ARE:

UNLESS OTHERWISE SPECIFIED, ALL DIMENSIONS ARE GIVEN IN INCHES, THIRD ANGLE PROJECTION.

DRAWN BY: BAME

DATE: 1-25-12

CHK'D: PM

MAT'L: STEEL

SCALE: NONE

DRAWING NO.: V10160JH-DC SHT 1 OF 2

DWG SIZE: A

THIS COPY IS PROVIDED ON A RESTRICTED BASIS AND IS NOT TO BE USED IN ANY WAY DETRIMENTAL TO THE INTERESTS OF PANDUIT CORP.

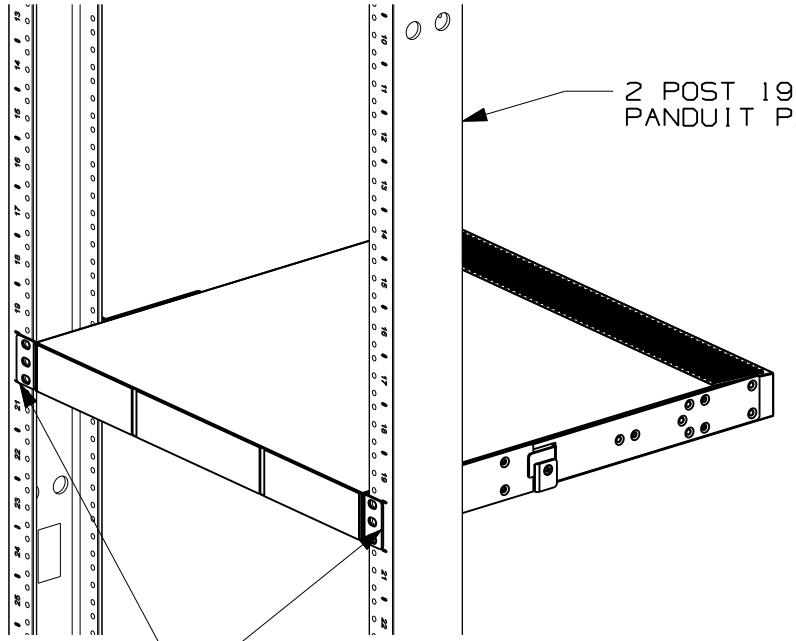

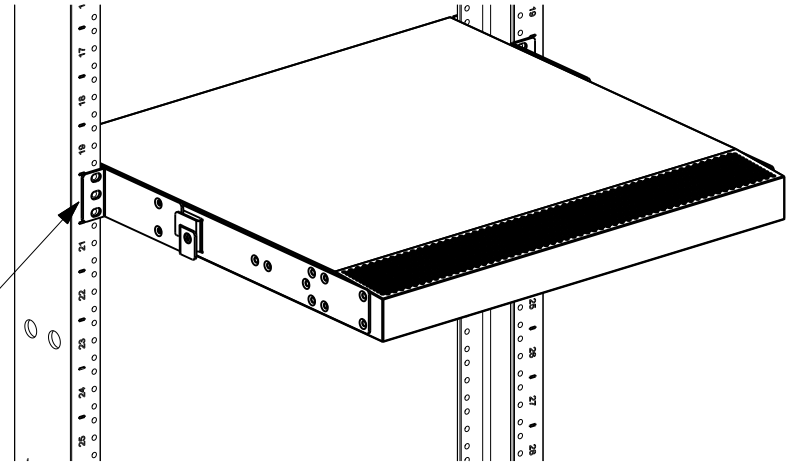

REV	DATE	BY	CHK	DESCRIPTION	ECN - R	CUST	SUP	OTH
00A	1-25-12	BAME	PM	SEE SHEET 1 OF 2	V10160JH-DC	CMK		

MODEL FILENAME: V10160JH/00

CAD FILENAME/LAYERS: V10160JH_DC/00A

PANDUIT CORP. TINLEY PARK, ILLINOIS

N3K MOUNT BRACKET ASSEMBLY
(R2PN3KB)
CUSTOMER DRAWING

UNLESS OTHERWISE SPECIFIED, DIMENSIONAL TOLERANCES ARE:

UNLESS OTHERWISE SPECIFIED, ALL DIMENSIONS ARE GIVEN IN INCHES, THIRD ANGLE PROJECTION.

DRAWN BY: BAME

DATE: 1-25-12

CHK'D: PM

MAT'L: STEEL

SCALE: NONE

DRAWING NO.: V10160JH-DC SHT 2 OF 2

DWG SIZE: A