PANDUIT P/N	WEIGHT
P06D19M	10.4kg

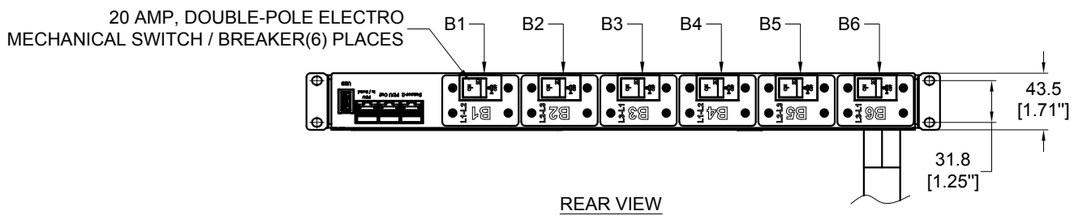

REAR VIEW

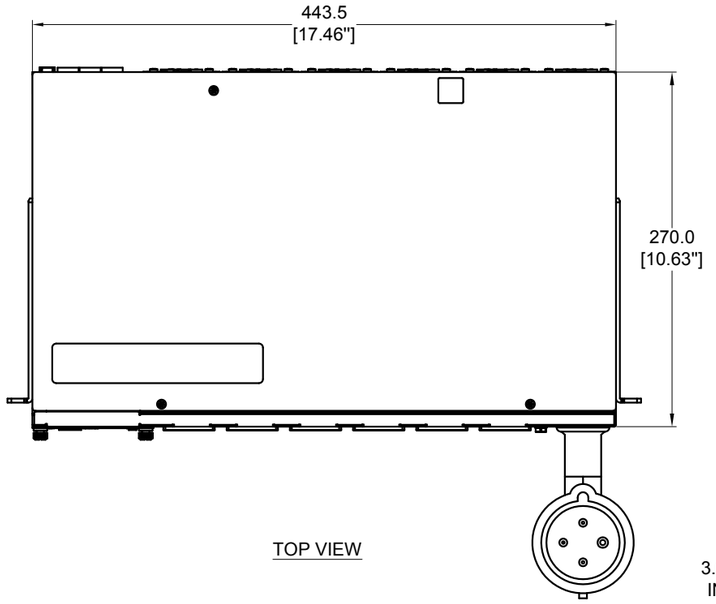

TOP VIEW

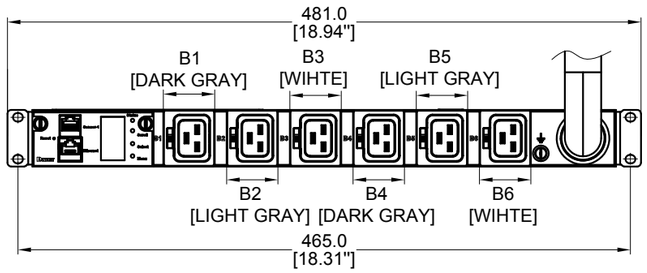

FRONT VIEW

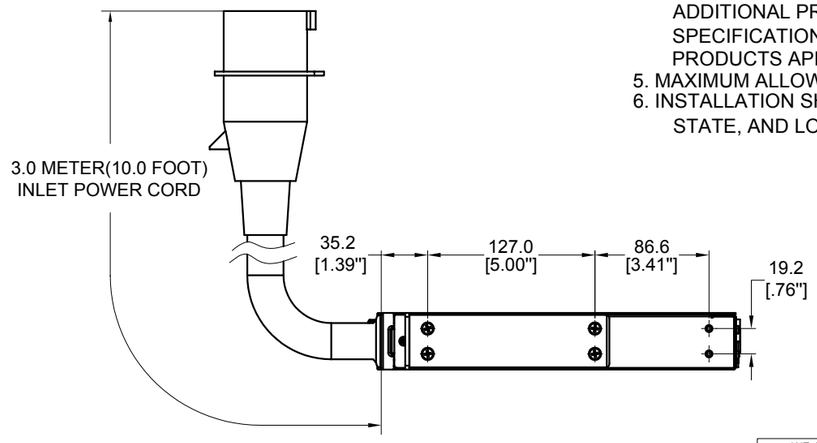

SIDE VIEW

NOTES:

1. IDENTIFICATION:

UNIT TYPE:	MONITORED INPUT
ORIENTATION:	HORIZONTAL, 1U
OUTLET QTY&TYPE:	(6) C19
BREAKER QTY&TYPE:	(6) 20AMP, DOUBLE-POLE
INPUT VOLTAGE:	200-240VAC, DELTA
INPUT CURRENT:	60A (48A DERATED)
INPUT PHASE:	THREE-PHASE DELTA
RATED POWER:	17.3kVA
INPUT PLUG:	IEC 60309 3P+E 9H 60A
INPUT CORD LENGTH:	3m [10']

2. ACCESSORIES:
   POCKET GUIDE
   QTY: (4) M6 X 12 PAN HEAD MACHINE SCREWS
   QTY: (4) M6 CAGED NUT
3. RoHS COMPLIANT
4. VISIT PANDUIT'S ON-LINE CATALOG AT WWW.PANDUIT.COM FOR ADDITIONAL PRODUCT INFORMATION CONTAINED IN THE SPECIFICATION SHEET AS WELL AS A CURRENT LIST OF PRODUCTS APPLICABLE FOR USE WITH THIS PART
5. MAXIMUM ALLOWABLE INPUT POWER = 17.3 kW
6. INSTALLATION SHALL COMPLY WITH ALL APPLICABLE NATIONAL, STATE, AND LOCAL CODES

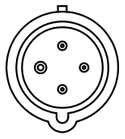

PLUG
60 AMP, 250V x 3~ DELTA
3P/4W
IEC 60309, SPLASHPROOF, IP44
2G(S); 2W(W), 9H;

SIX (6)
RECEPTACLES
16 AMP, 250V
STRAIGHT BLADE
IEC 60320/C19

REV	DATE	BY	CHK	APR	DESCRIPTION	ECN
01A	07/13/2017	GEORGE	MIM	EDM	INITIAL RELEASE	P06D19M

WE ASK THAT YOU CHECK FULLY THE DIMENSIONS, NOTES, AND SIGN THE CLIENT SIGNATURE BOX. THE JOB WILL NOT PROGRESS WITHOUT SIGNED APPROVAL. PLEASE DO NOT DELAY IN RETURNING PROOF AS IT WILL AFFECT DELIVERY

SIGN
DATE
PRINT

TITLE
INTELLIGENT SERIES PDU
P06D19M
CUSTOMER DRAWING

ITEM REVISION NAME:

DATASHEET FILE NAME:

UNLESS OTHERWISE SPECIFIED
DIMENSIONAL TOLERANCE ARE: mm [IN]

THIRD ANGLE PROJECTION

Tolerance(mm)	
0<L<200	±0.5
200<L<500	±1.5
500<L<1000	±2.5
1000<L<2000	±4.0

MATERIAL/COLOR: N/A

DRAWING NUMBER: P06D19M_DC

DRAWN BY	DATE	CHK	SCALE		SCALE
GEORGE	06/27/2017	SEAN	NONE	SHT 1 OF 1	B