THIS COPY IS PROVIDED ON A RESTRICTED BASIS AND IS NOT TO BE USED IN ANY WAY DETRIMENTAL TO THE INTERESTS OF PANDUIT CORP.

Material	High Conductivity Seamless Copper Tube
Plating	Electro-Tin
Wire Size	4 AWG, 3 AWG & 2 SOL
Wire Type	Stranded Copper; Class B: Compact, Compressed or Concentric, Class C: Concentric
Wire Strip Length	7/8 in.
Stud Size	1/2 in.
UL Listed Wire Connector	Yes, for applications up to 35kv. Consult cable manufacturer for voltage stress relief instructions with applications greater than 2000 volts.
UL Temperature Rating	90° C
C.S.A Certified Wire Connector	N/A
Panduit Color Code on Barrel	GRAY
Panduit Die Index No. on Barrel	P29
Alternate Industry Die Index No. ( ) on Barrel	(8)

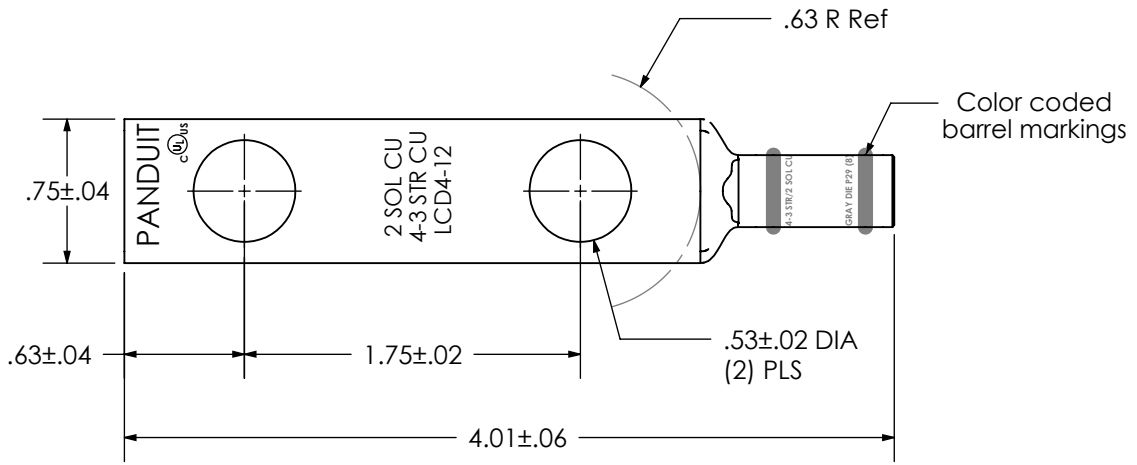

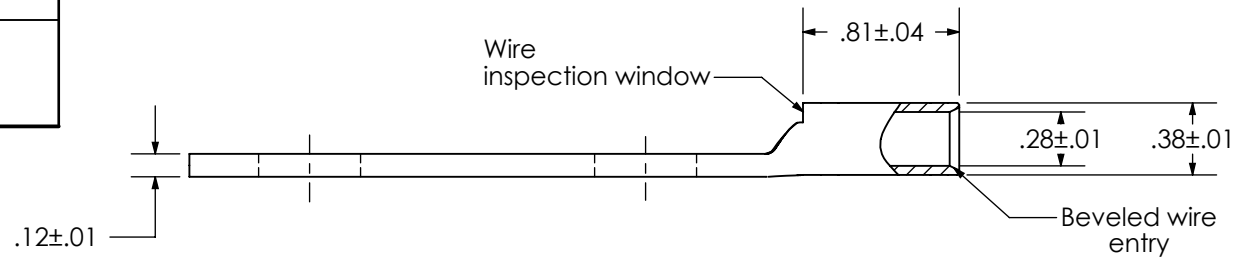

c UL us LISTED

REV	DATE	BY	CHK	DESCRIPTION	ECN
00	9/17	JHNU	JHNU	DRAWING RELEASED	022679

PANDUIT CORP. TINLEY PARK, ILLINOIS

LCD4-12-L
Copper Lug - Two-Hole, Standard Barrel

SCALE N/A

DRAWING NO / CAD FILE LCD4-12-CUST