PART No.

for more information visit

www.hammfg.com

Data subject to change without notice

Isometric drawing Not to Scale
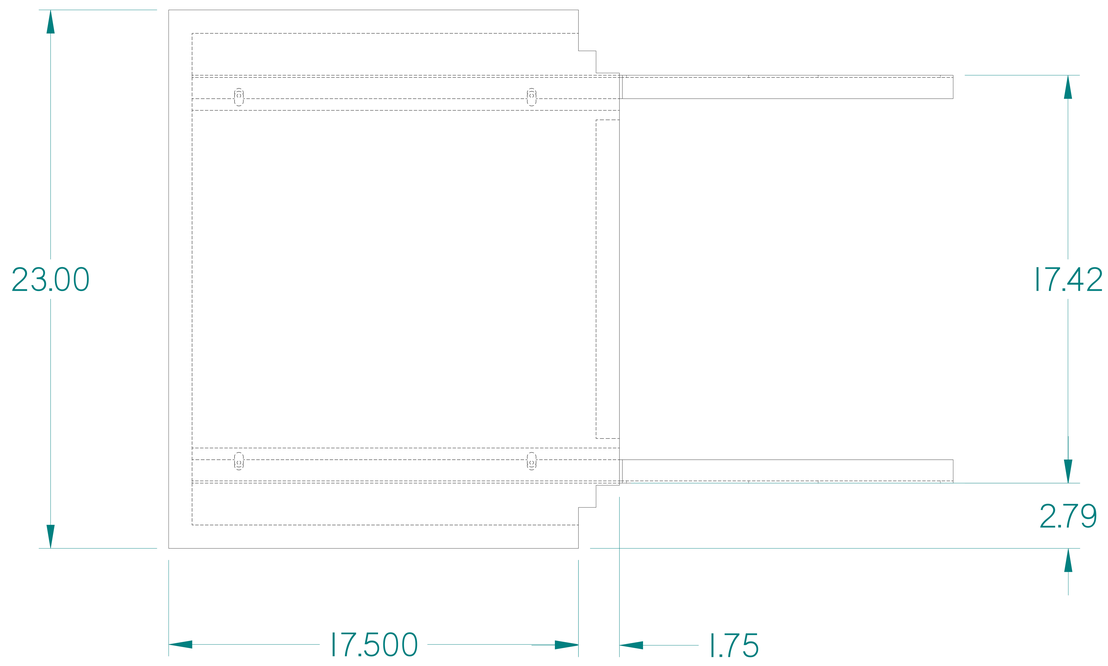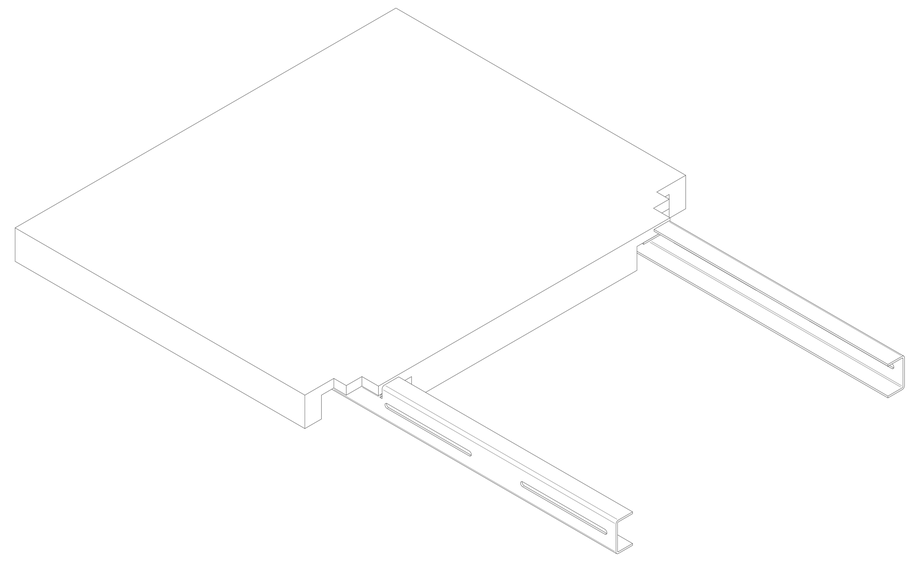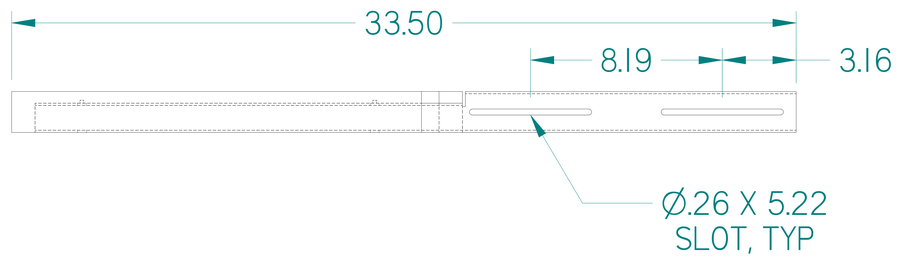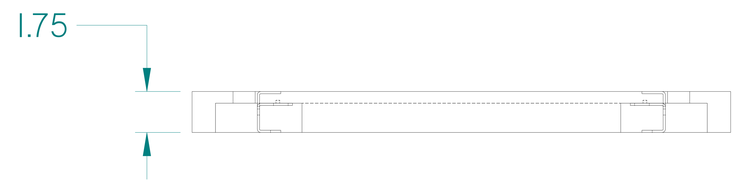
CW19CG4