6 POSITIONS OF 6U RAILS

(FOR REFERENCE DIMENSIONS ONLY)

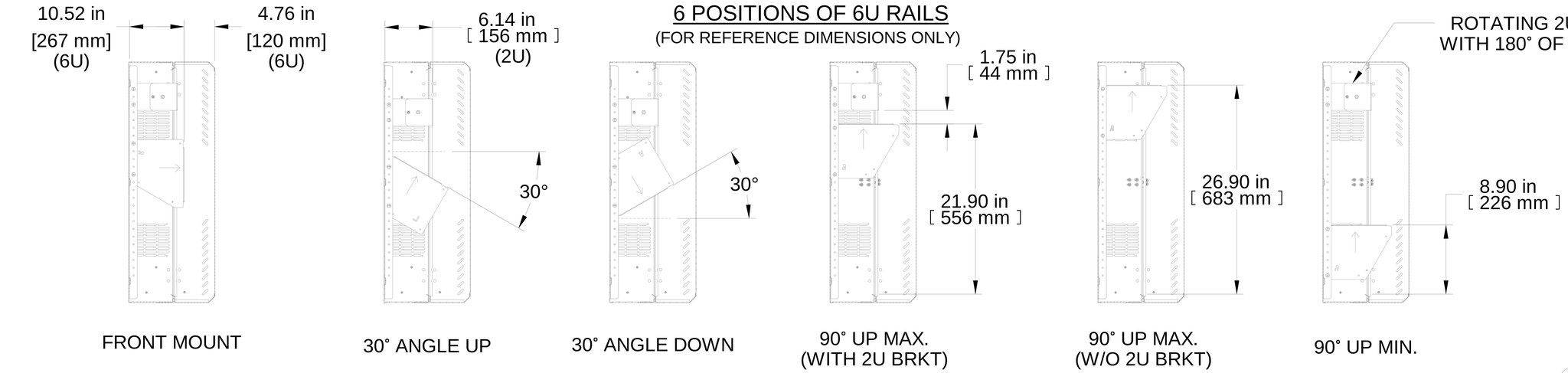

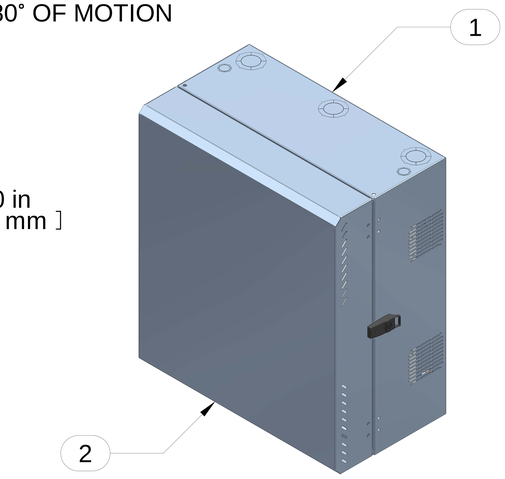

ISOMETRIC

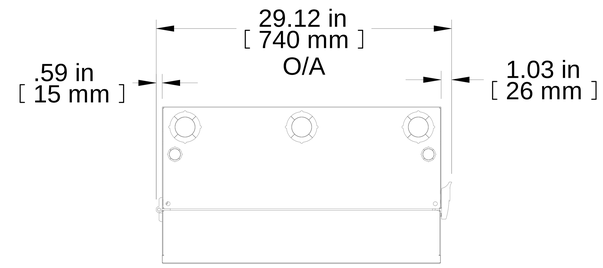

TOP VIEW

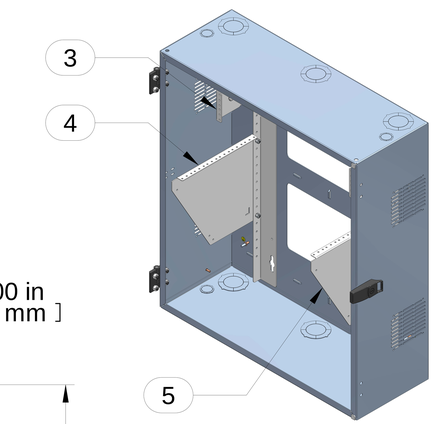

ISOMETRIC
(DOOR REMOVED)

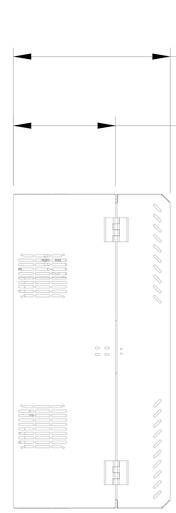

L.S. VIEW

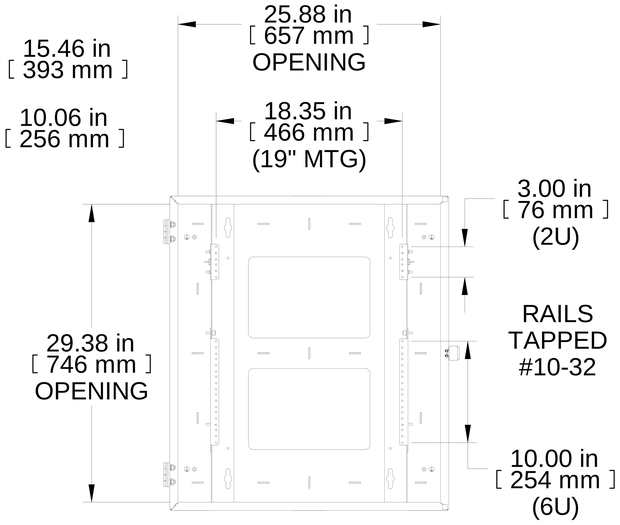

FRONT VIEW
DOOR REMOVED
FRONT MOUNT RAILS

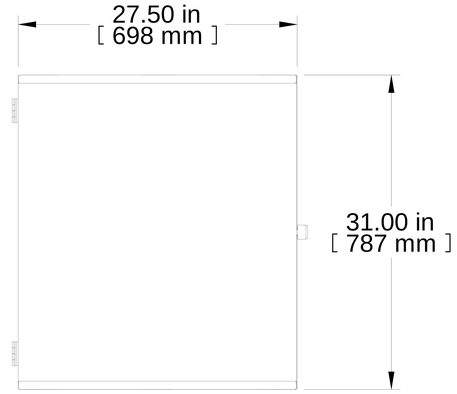

FRONT VIEW

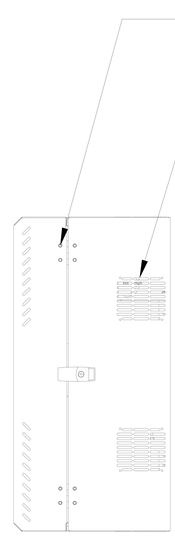

R.S. VIEW

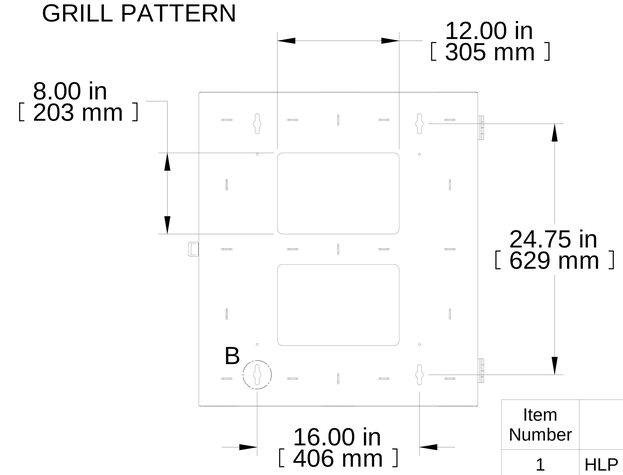

REAR VIEW

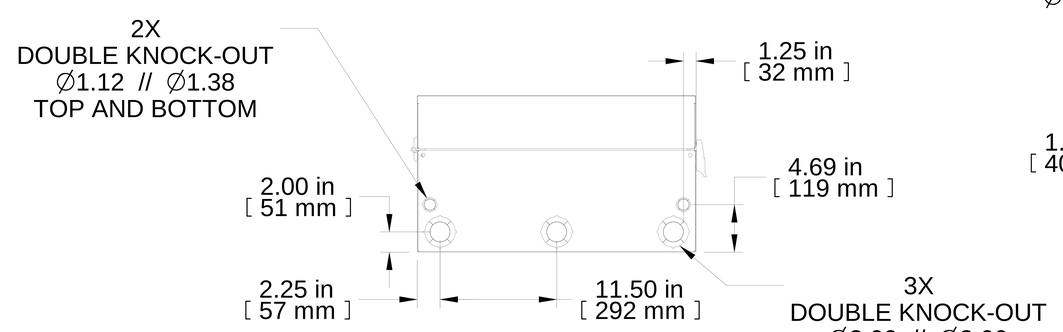

BOTTOM VIEW

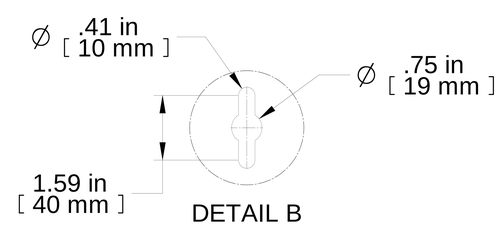

DETAIL B

Item Number	Title	Quantity
1	HLP - REAR SECTION 31H/6UDP	1
2	HLP - DOOR ASSEMBLY (31H)	1
3	HLP - ROTATING 2U BRKT ASSEMBLY	2
4	HLP - FIXED 90/30 DEG. RAIL (6U)	1
5	HLP - FIXED RAIL RH 90/30 (6U)	1

PART NUMBERS

HLP6U31LG	PAINTED LIGHT GREY TEXTURED

NOTES

Mounting Rails Painted White
Wall Mounting Hardware Not Included
See Hammond Website for More Information

Français

Pour tous les détails sur nos produits,
svp veuillez consulter notre site www.hammondmfg.com
Data subject to change without notice. Isometric drawing not to scale.
Les données sont sujettes à changement sans préavis.

HAMMOND MANUFACTURING®
www.hammondmfg.com

PART NO. **HLP6U31LG**