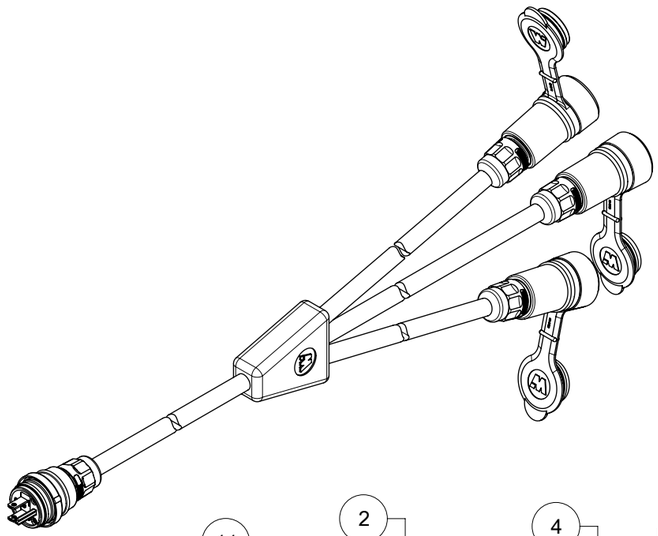

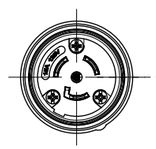

FACE VIEW OF
MALE INSERT

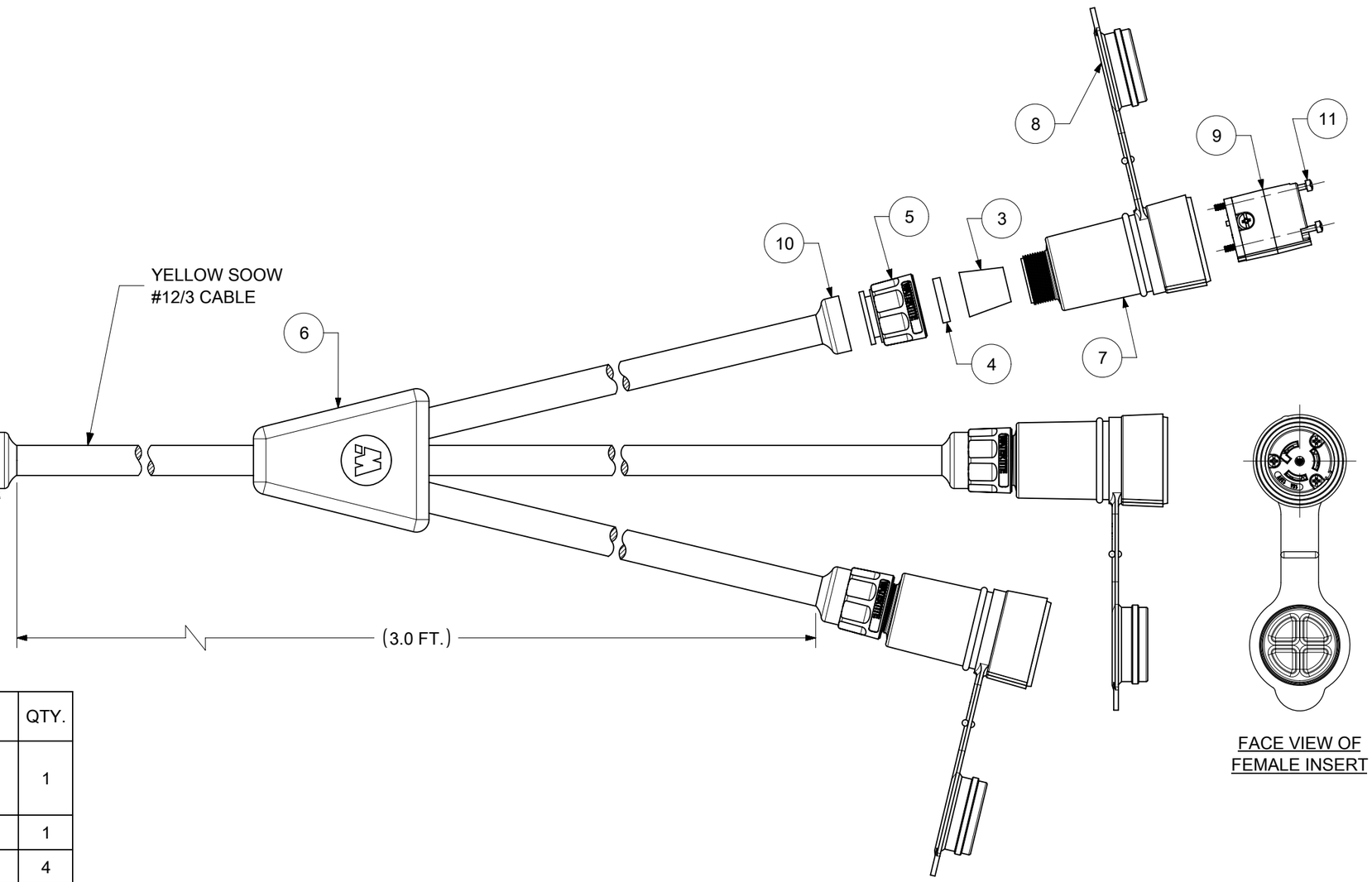

FACE VIEW OF
FEMALE INSERT

ITEM NO.	DESCRIPTION	MATERIAL	QTY.
1	MALE INSERT ASSY.	NYLON, POLYCARBONATE, BRASS PLATING - NICKEL OR ZINC	1
2	WATERTITE - MALE HUSK	SILICONE	1
3	GROMMET	RUBBER	4
4	FRICTION RING	NYLON	4
5	COMPRESSION NUT YELLOW	NYLON	4
6	MOLDED "W" - CORDSET	JACKET: RUBBER; CONDUCTOR: COPPER	1
7	WATERTITE - FEMALE HUSK	SILICONE	3
8	CLOSURE CAP YELLOW	SILICONE	3
9	FEMALE INSERT ASSY.	NYLON, POLYCARBONATE, BRASS PLATING - NICKEL OR ZINC	3
10	CABLE GLOVE	SILICONE	4
11	RETAINING SCREW	STAINLESS STEEL	12

DOCUMENT STATUS	P1	RELEASE DATE	2020/02/05 18:29:53

MATERIAL NO.	ENGINEERING NO.	DESCRIPTION
1301540058	24W47-W	MOLDED W-SPLICE (1) 24W47 & (3) 25W47

THIS DRAWING CONTAINS INFORMATION THAT IS PROPRIETARY TO MOLEX ELECTRONIC TECHNOLOGIES, LLC AND SHOULD NOT BE USED WITHOUT WRITTEN PERMISSION

SYMBOLS: = 0 (A) = 0 (C) = 0 (B) = 0 (S) = 0 ▼ = 0 (F) = 0 ☒ = 0 ■ = 0 (V) = 0

DIMENSION UNITS	SCALE
INCH	NTS

GENERAL TOLERANCES (UNLESS SPECIFIED)

ANGULAR TOL	±	°
4 PLACES	±	
3 PLACES	±	
2 PLACES	±	
1 PLACE	±	
0 PLACES	±	

DRAFT WHERE APPLICABLE MUST REMAIN WITHIN DIMENSIONS

CURRENT REV DESC: NEW RELEASE

EC NO: 621531
DRWN: PPURSUTANDEL 2019/07/19
CHK'D: PPURSUTANDEL 2019/12/04
APPR: HKNEELAND 2020/02/05

INITIAL REVISION:
DRWN: PPURSUTANDEL 2019/07/19
APPR: HKNEELAND 2020/02/05

molex

MOLDED W-SPLICE WITH
WATERTITE PLUG AND CONNECTOR

PRODUCT CUSTOMER DRAWING

DOCUMENT NUMBER	DOC TYPE	DOC PART	REVISION
1301540058	PSD	000	A

THIRD ANGLE PROJECTION	DRAWING	SERIES	MATERIAL NUMBER	CUSTOMER	SHEET NUMBER
	B-SIZE	130154	SEE CHART	GENERAL MARKET	1 OF 1

FORMAT: master-lb-portrait
REVISION: H
DATE: 2018/01/18