ORDER NO.	WOODHEAD NO.	COLOR
130142-0036	2874	YELLOW

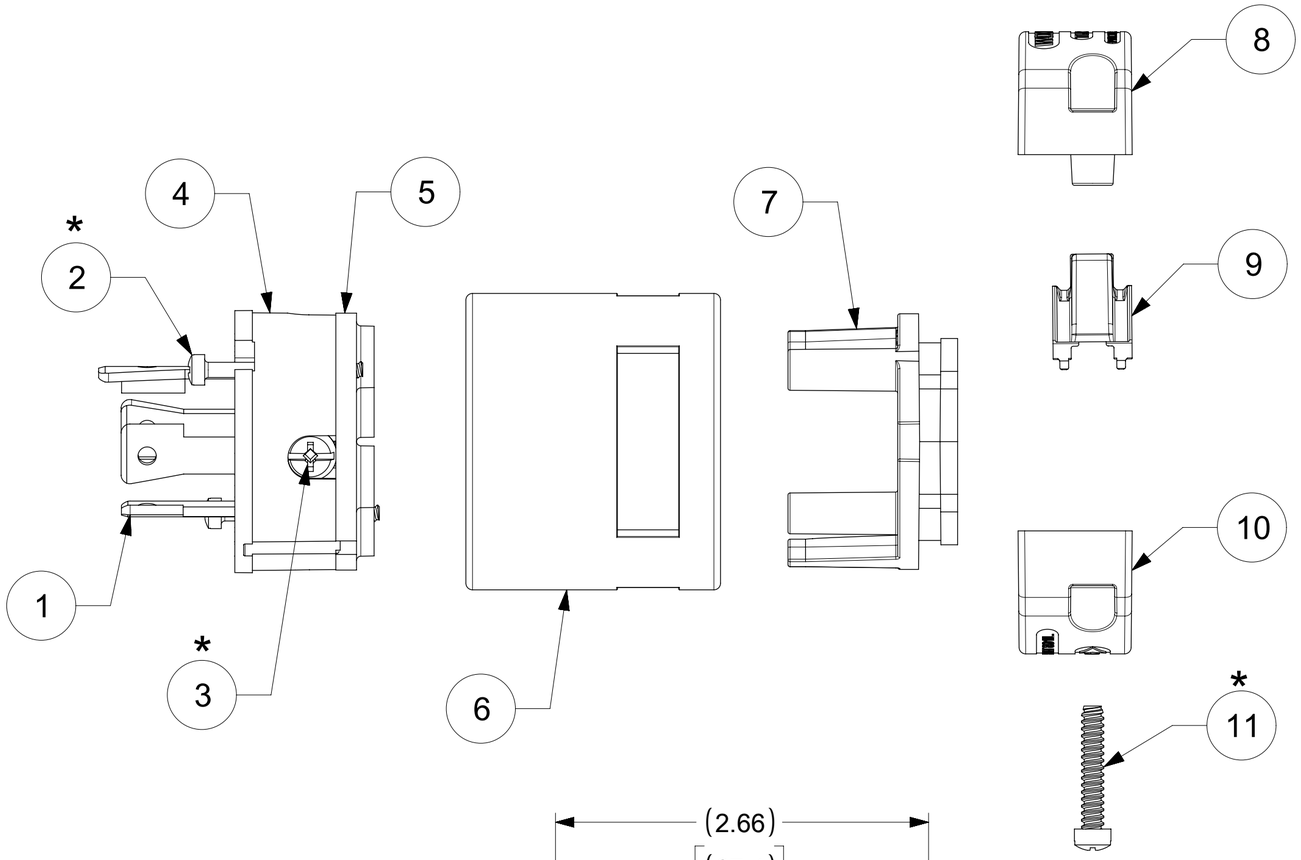

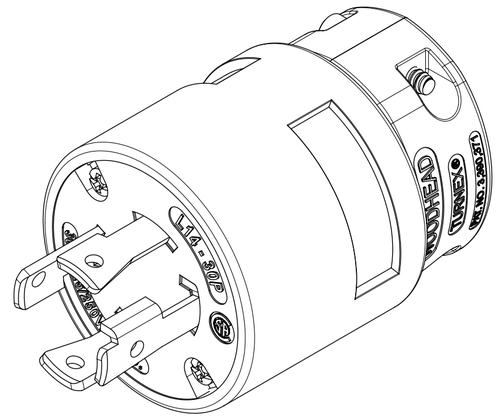

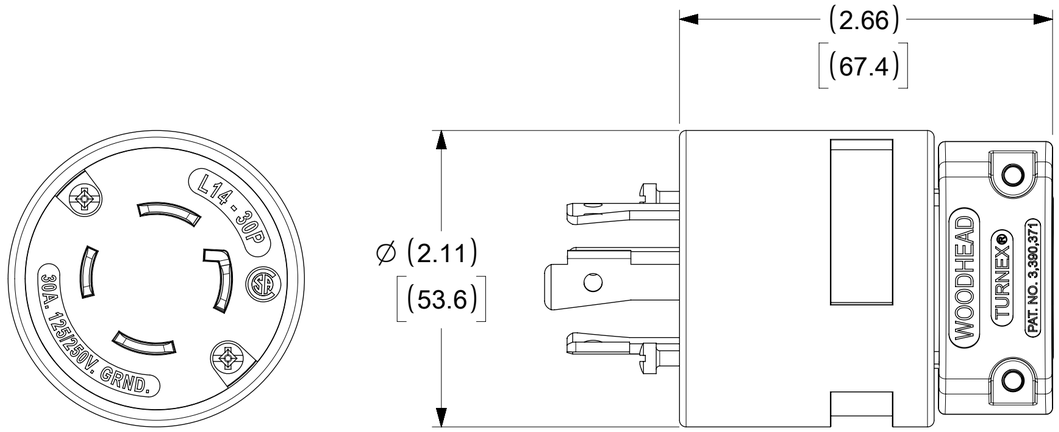

WIRING TERMINATION

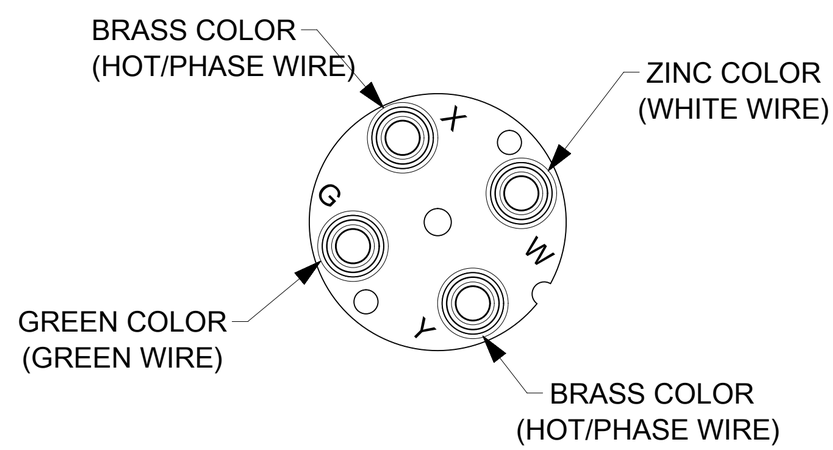

* FOR SCREW TORQUE, SEE ASSEMBLY INSTRUCTIONS

ITEM NO.	DESCRIPTION	MATERIAL	QTY.
1	BLADES	BRASS, NICKEL PLATED	4
2	RETAINING SCREWS	STAINLESS STEEL	2
3	TERMINAL SCREWS/CLAMP ASSEMBLY	BRASS, ZINC PLATED	4
4	INSERT; YELLOW	NYLON	1
5	TERMINAL COVER	POLYCARBONATE	1
6	MALE RUBBER HUSK	NYLON	1
7	CLAMP SUPPORT, YELLOW	NYLON	1
8	CLAMP CHORD MALE, YELLOW	NYLON	1
9	CLAMP CHORD INSERT, WHITE	NYLON	1
10	CLAMP CORD FEMALE, YELLOW	NYLON	1
11	RETAINING SCREWS	STAINLESS STEEL	2

DOCUMENT STATUS	P1	RELEASE DATE	2020/04/11 00:14:53

THIS DRAWING CONTAINS INFORMATION THAT IS PROPRIETARY TO MOLEX ELECTRONIC TECHNOLOGIES, LLC AND SHOULD NOT BE USED WITHOUT WRITTEN PERMISSION

SYMBOLS: = 0 (5A) = 0 (5C) = 0 (5P) = 0 (5S) = 0 = 0 (C) = 0 = 0 = 0 = 0

DIMENSION UNITS: INCH/MM
SCALE: NTS

GENERAL TOLERANCES (UNLESS SPECIFIED)

	MM	INCH
4 PLACES	±	±
3 PLACES	±	±
2 PLACES	±	±
1 PLACE	±	±
0 PLACES	±	±
ANGULAR TOL	± °	

DRAFT WHERE APPLICABLE MUST REMAIN WITHIN DIMENSIONS

CURRENT REV DESC: NEW RELEASE

EC NO: 628447
DRWN: ABENJAMINLW 2019/04/01
CHK'D: DNGUYEN62 2020/01/14
APPR: HKNEELAND 2020/04/11

INITIAL REVISION:
DRWN: ABENJAMINLW 2019/04/01
APPR: HKNEELAND 2020/04/11

THIRD ANGLE PROJECTION | DRAWING: C-SIZE | SERIES: 130142

molex

SUPER-SAFEWAY PLUG NEMA 3P4W L14-30P

PRODUCT CUSTOMER DRAWING

DOCUMENT NUMBER	DOC TYPE	DOC PART	REVISION
1301420036	PSD	000	A

MATERIAL NUMBER	CUSTOMER	SHEET NUMBER
SEE TABLE	GENERAL MARKET	1 OF 1

FORMAT: Eng-tega-master-tb-prod-C
REVISION: D
DATE: 2018/01/18