ORDER NO.	WOODHEAD NO.	COLOR
130147-0153	67W82	YELLOW

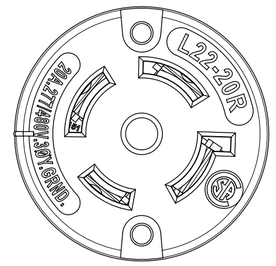

FACE VIEW

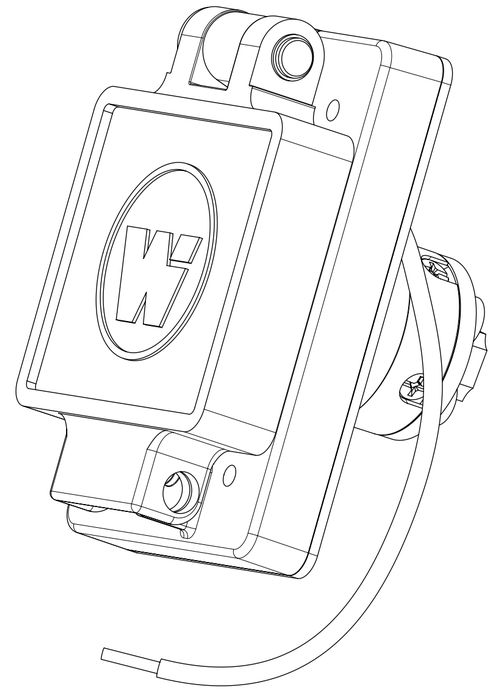

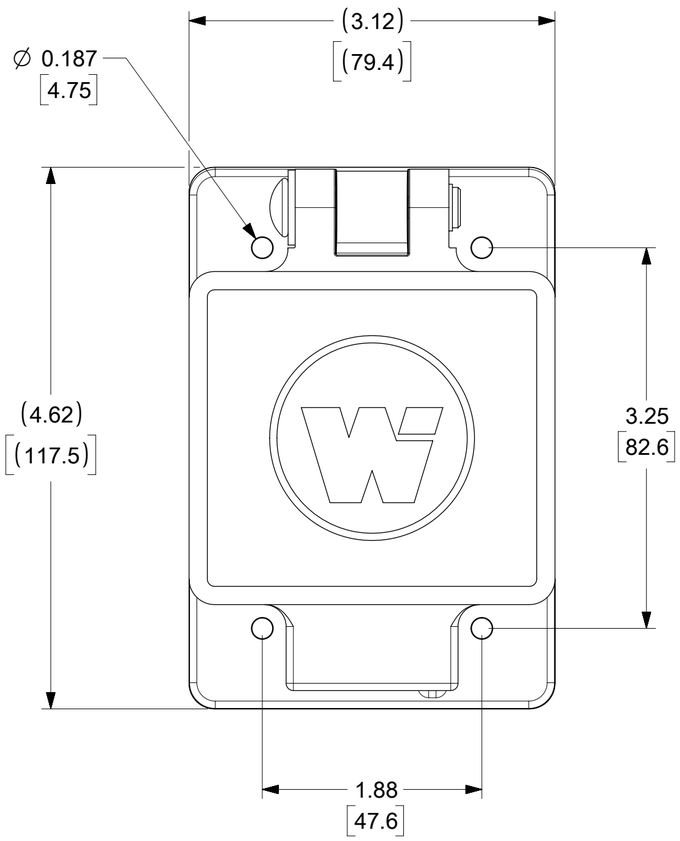

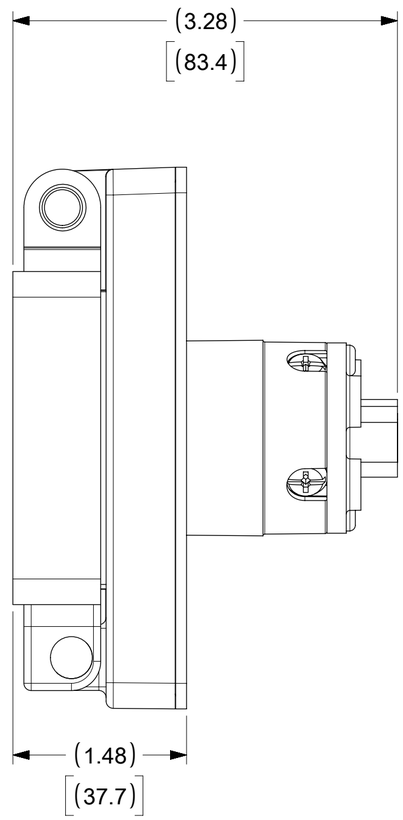

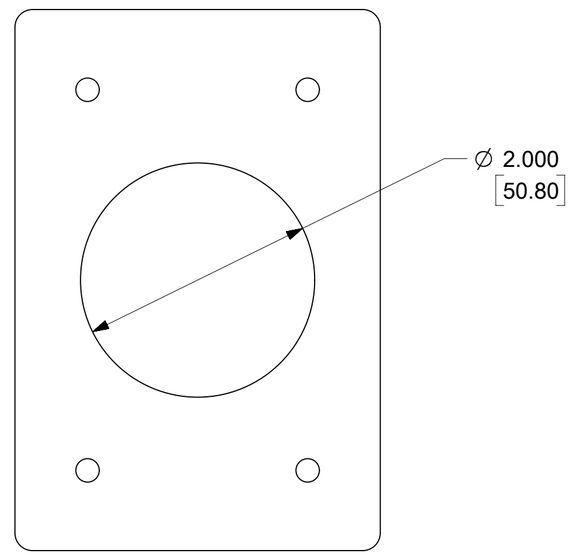

CLEARENCE HOLE
(FOR PANEL MOUNT)

DESCRPITION	MATERIAL	QTY.
BLADES	BRASS, NICKEL PLATED	3
RETAINING SCREWS	STAINLESS STEEL	3
CLAMP AND TERMINAL SCREW ASSY.	BRASS, ZINC PLATED	3
FEMALE INSERT	NYLON	1
TERMINAL COVER	POLYCARBONATE	1
COVER ASSEMBLY	POLYCARBONATE, STAINLESS STEEL, ALUMINUM	1
GASKET FLIP	NEOPRENE	1
SUPPORT PLATE	STAINLESS STEEL	1
SCREW (GROUND WIRE)	STAINLESS STEEL	1
JUMPER WIRE ASSY	COPPER, BRASS (TINNED FINISH)	1

DOCUMENT STATUS	P1	RELEASE DATE	2019/03/22 18:16:55

SYMBOLS: = 0 (A) = 0 (C) = 0 (P) = 0 (S) = 0 = 0 (V) = 0 = 0 = 0 = 0

THIS DRAWING CONTAINS INFORMATION THAT IS PROPRIETARY TO MOLEX ELECTRONIC TECHNOLOGIES, LLC AND SHOULD NOT BE USED WITHOUT WRITTEN PERMISSION

DIMENSION UNITS: INCH[MM] | SCALE: NTS

GENERAL TOLERANCES (UNLESS SPECIFIED)

	MM	INCH
4 PLACES	±	±
3 PLACES	±	±
2 PLACES	±	±
1 PLACE	±	±
0 PLACES	±	±
ANGULAR TOL	± °	

DRAFT WHERE APPLICABLE MUST REMAIN WITHIN DIMENSIONS

CURRENT REV DESC: MIGRATE TO ECTR/NX

EC NO: 613843
DRWN: SRPATIL 2018/12/21
CHK'D: DNGUYEN62 2019/03/15
APPR: HKNEELAND 2019/03/22

INITIAL REVISION:
DRWN: SRPATIL 2018/12/21
APPR: HKNEELAND 2019/03/22

THIRD ANGLE PROJECTION | DRAWING: C-SIZE | SERIES: 130147

molex

WATERTITE FS/FD COVER 4P5W L22-20

PRODUCT CUSTOMER DRAWING

DOCUMENT NUMBER	DOC TYPE	DOC PART	REVISION
1301470153	PSD	000	A

MATERIAL NUMBER	CUSTOMER	SHEET NUMBER
SEE TABLE	GENERAL MARKET	1 OF 1

FORMAT: Eng-lega-master-tb-prod-C
REVISION: D
DATE: 2018/01/18