MATERIAL NUMBER	OLD PART NUMBER
1300360009	DN6100

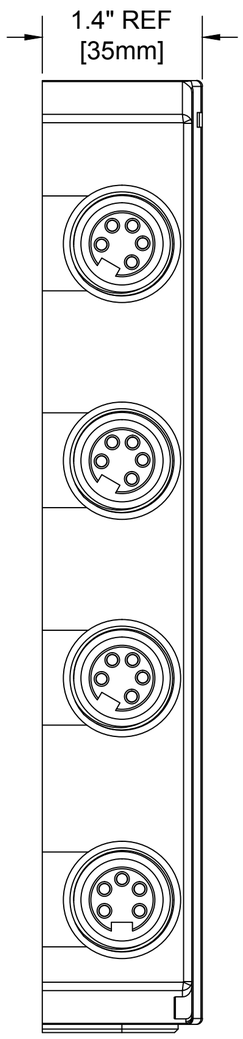

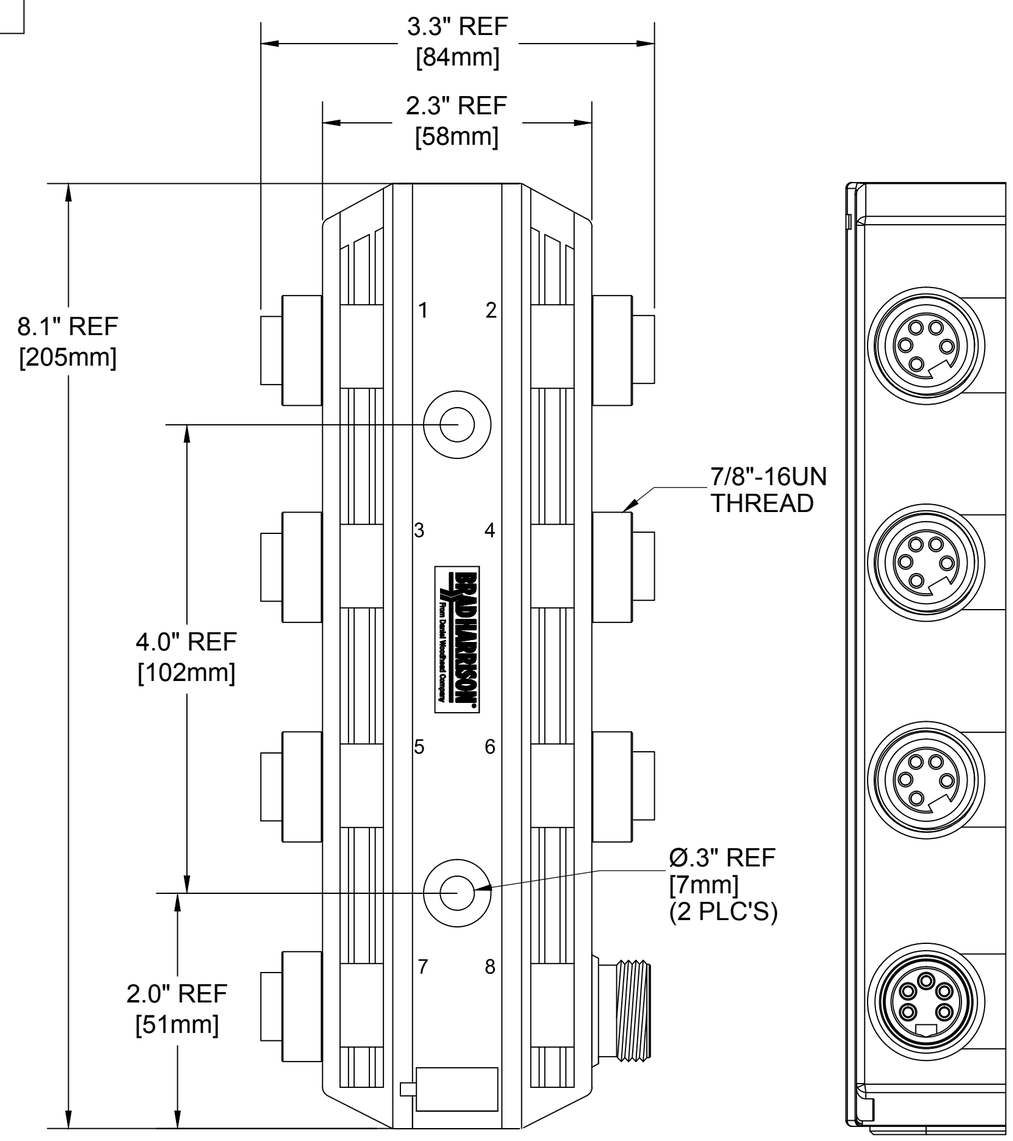

SCHEMATIC

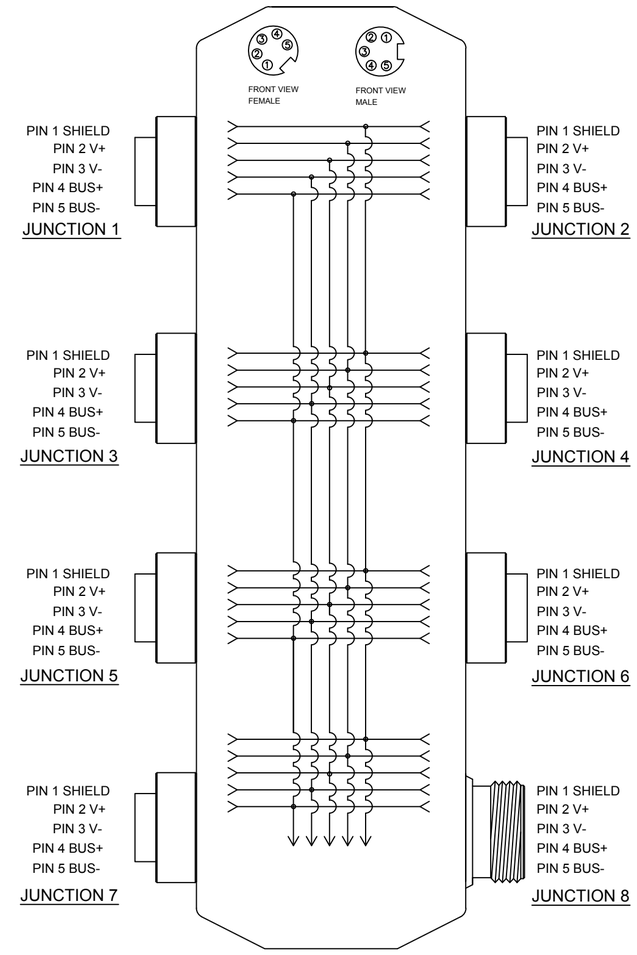

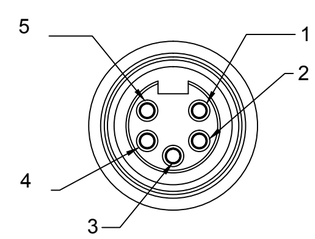

FEMALE FACE VIEW

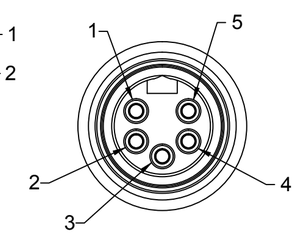

MALE FACE VIEW

SPECIFICATION DATA

COMPONENT	MATERIAL	FINISH
LABEL	ABS	WHITE
HOUSING	PBT	BLACK
CONTACT	COPPER ALLOY	Au OVER Ni
INSERT	PVC	GRAY
POTTING MATERIAL	EPOXY	BLACK
RECEPTACLE SHELL	ZINC DIE CAST	BLACK E-COATED

VOLTAGE RATING:	120 VAC/VDC
AMPERAGE RATING:	7A
PROTECTION CLASS:	IP 67
OPERATING TEMPERATURE:	0°C / 60°C

REV	DESCRIPTION
B	UPDATED DRAWING EC NO: IPG2014-0099 DRWN: GGUSTAFS 2014/01/02 CH'KD: BARDEN --- APPR: BWOODMAN ---

QUALITY SYMBOL
▼=0
(C)=0

GENERAL TOLERANCES (UNLESS SPECIFIED)

	mm	INCH
4 PLACES	±---	±---
3 PLACES	±---	±.005
2 PLACES	±.13	±.010
1 PLACE	±.25	±.020
ANGULAR ±.5°		

DRAFT WHERE APPLICABLE MUST REMAIN WITHIN DIMENSIONS

DIMENSION STYLE: IN/MM
SCALE: NTS
DESIGN UNITS: INCH
THIRD ANGLE PROJECTION

DRAWN BY: GGUSTAFS DATE: 2014/01/02
CHECKED BY: ---- DATE: ----
APPROVED BY: ---- DATE: ----

TITLE: MC 6 PORT PASS-THRU MPIS DEVICENET
---

molex MOLEX INCORPORATED

MATERIAL NO.: SEE CHART
DOCUMENT NO.: SD-130036-005
SHEET NO.: 1 0F 1
SIZE: C

THIS DRAWING CONTAINS INFORMATION THAT IS PROPRIETARY TO MOLEX INCORPORATED AND SHOULD NOT BE USED WITHOUT WRITTEN PERMISSION