MATERIAL NUMBER	ENGINEERING NUMBER
1300600017	409P801

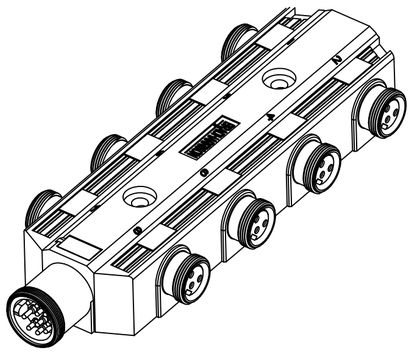

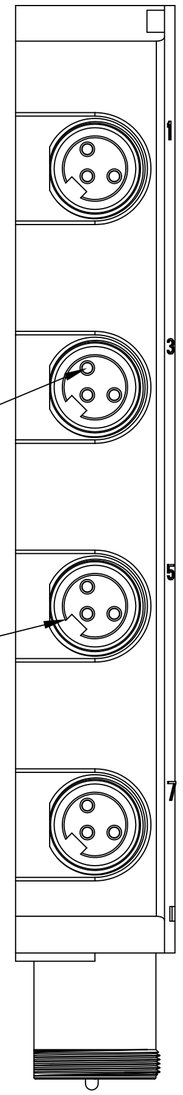

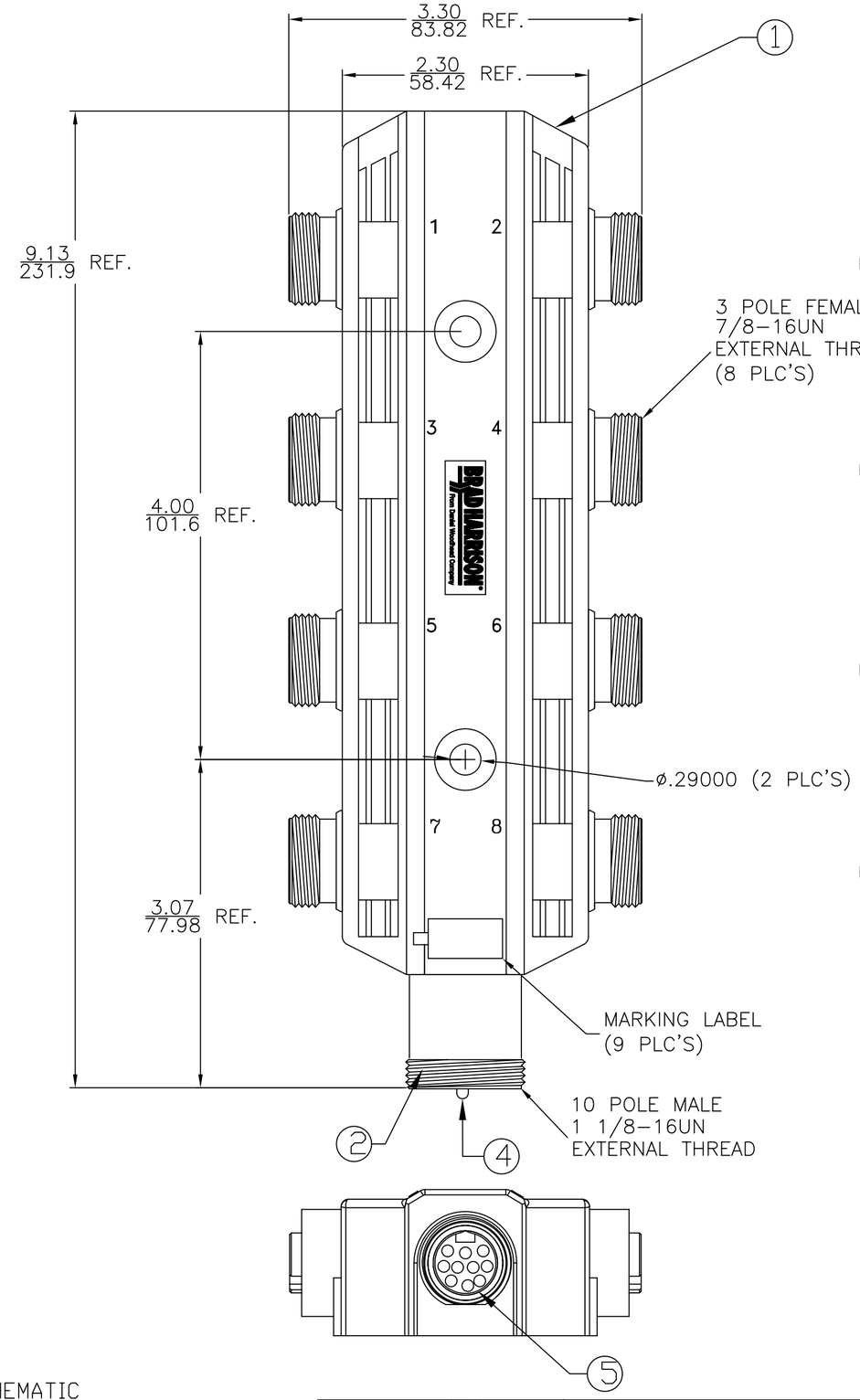

SCHEMATIC

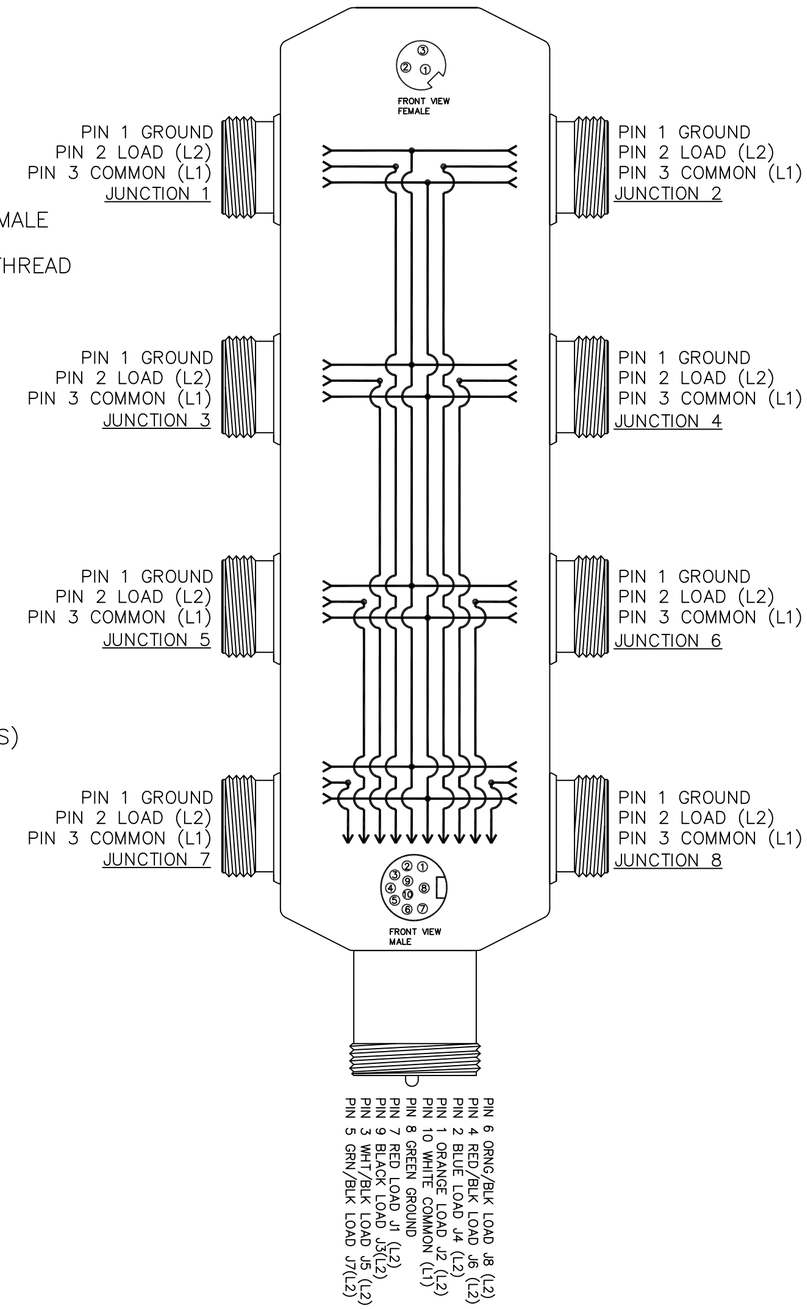

NOTES:

1) MATERIAL: SEE TABLE
2) FINISHES: SEE TABLE
3) ELECTRICAL DATA:
   VOLTAGE: 600V AC/DC
   AMPERAGE: 7AMPS PER MPIS UNIT
4) ENVIRONMENTAL:
   PROTECTION IP67
   OPERATING TEMPERATURE RANGE: -25C TO 90C
5) LABEL IS MARKED WITH P/N, DATE CODE, AND SCHEMATIC
6) CERTIFICATION:
   UL: UL RECOGNIZED
   CSA: CSA CERTIFIED

ITEM	QTY.	DESCRIPTION	MATERIAL	FINISH
5	9	INSERT	PVC	YELLOW
4	10	PIN CONTACT	COPPER ALLOY	GOLD PLATED
3	24	SOCKET CONTACT	COPPER ALLOY	GOLD PLATED
2	9	RECEPTACLE SHELL	E-COATED ZINC ALLOY	BLACK
1	1	HOUSING	PBT	YELLOW

REV	DESCRIPTION
A	RELEASE EC NO: WNA2010-0456 DRWN: TWOLDEGE 2010/01/22 CH'KD: BWOODMAN — APPR: JFMURPHY 2010/01/29

QUALITY SYMBOL
▼=0
(C)=0

GENERAL TOLERANCES (UNLESS SPECIFIED)	mm	INCH
4 PLACES	±---	±---
3 PLACES	±---	±.005
2 PLACES	±0.13	±.010
1 PLACE	±0.25	±.020
ANGULAR ±1/2°		

DRAFT WHERE APPLICABLE MUST REMAIN WITHIN DIMENSIONS

DIMENSION STYLE: ----
SCALE: 1:1
DESIGN UNITS: INCH
THIRD ANGLE PROJECTION

DRAWN BY: ---- DATE: ----
CHECKED BY: BWOODMAN DATE: ----
APPROVED BY: JFMURPHY DATE: 2010/01/29

TITLE: 8PORT SIDE MOUNT MPIS 8PORT 3-POLE FEMALE W/ 10P MALE HOME RUN CONN.

molex MOLEX INCORPORATED

MATERIAL NO.: SEE CHART
DOCUMENT NO.: SD-130060-004
SHEET NO.: 1 0F 1
SIZE: C

THIS DRAWING CONTAINS INFORMATION THAT IS PROPRIETARY TO MOLEX INCORPORATED AND SHOULD NOT BE USED WITHOUT WRITTEN PERMISSION