MATERIAL NUMBER	ENGINEERING NUMBER	FINISHED LENGTH
1300250153	DN19A-M005	0.5M [1FT 8 IN]
1300250163	DN19A-M150	15M [49FT 2 IN]
1300250170	DN19A-M300	30M [98FT 5 IN]

(B)

PART NO. MATRIX
DN19A-M005

FINISHED LENGTH:
M005= 0.5 METER
M010= 1 METER
M100= 10 METER

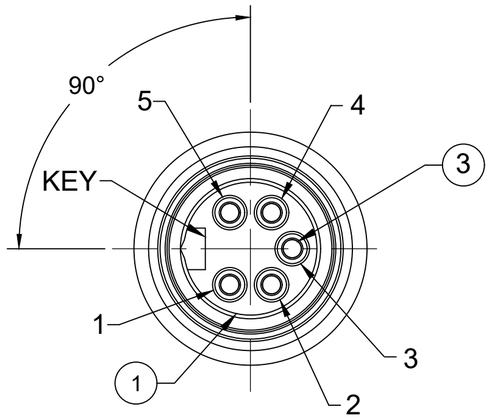

MALE FACE VIEW

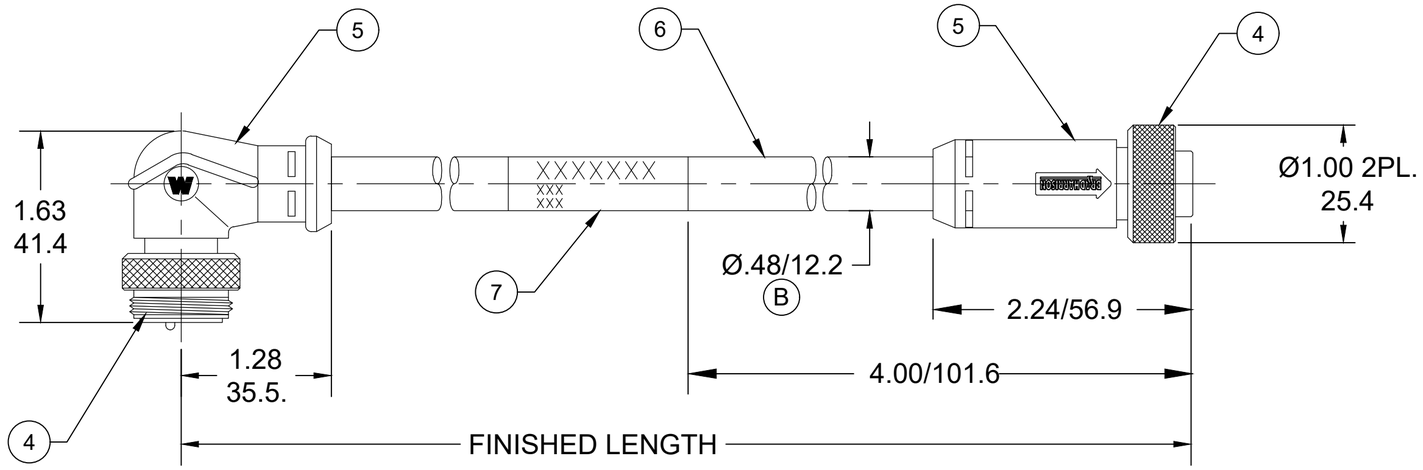

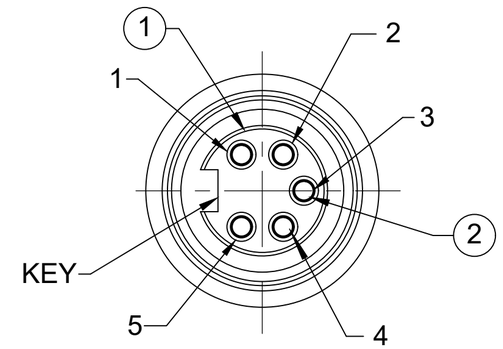

FEMALE FACE VIEW

NOTES:
1. MATERIAL: AS NOTED
2. FINISH: AS NOTED
3. ELECTRICAL:
   VOLTAGE RATING PER IEC 60664: 300V
   VOLTAGE RATING PER UL: 300V
   CURRENT: 8A
4. TEMP RATING: -25° TO +60°C (B)
5. PROTECTION: IP67 (WHEN MATED)
6. COUPLING THREAD: 7/8-16
7. UL RECOGNIZED FILE: E152210
   CSA CERTIFIED FILE: LR6837
8. ALL DIMENSIONS ARE FOR REFERENCE UNLESS TOLERANCED OR NOTED OTHERWISE

SCHEMATIC

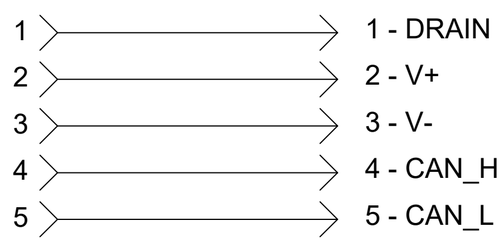

CABLE LENGTH TOLERANCES
>.3M [1FT]: +19mm-0 [+.75in-0]
.3 - .9M [1 - 3FT]: +44.5mm-0 [+1.75in-0]
.9 - 1.8M [3 - 6FT]: +55.6mm-0 [+2.19in-0]
1.8 - 3.7M [6 - 12FT: +88.9mm-0 [+3.50in-0]
3.7 - 7.3M [12 - 24FT]: +165.1mm-0 [+6.50in-0]
7.3-14.6M [24 - 48FT]: +317.5mm-0 [+12.50in-0]
14.6 - 30.5M [48-100FT]: +622.3mm-0 [+24.50in-0]
OVER 30M [100FT] +2% OF FINISHED LENGTH

ITEM	COMPONENT	MATERIAL	FINISH
1	INSERTS	TPE	GRAY
2	CONTACT SOCKET	COPPER ALLOY	GOLD OVER NICKEL
3	CONTACT PIN	COPPER ALLOY	GOLD OVER NICKEL
4	COUPLING NUTS	ZINC DIE CAST	BLACK E-COATED
5	OVERMOLDS	TPE	GRAY
6	CABLE-DEVICENET THICK CABLE 2/15 & 2/18 SHIELD PAIR	PVC	GRAY
7	WRAP LABEL	VINYL	BLACK/YELLOW

(B) (B)

PRE-RELEASE REFERENCE USE ONLY

THIS DRAWING CONTAINS INFORMATION THAT IS PROPRIETARY TO MOLEX ELECTRONIC TECHNOLOGIES, LLC AND SHOULD NOT BE USED WITHOUT WRITTEN PERMISSION

FUNCTIONAL SYMBOLS: FA=0, FC=0, FP=0
DIVISIONAL SYMBOLS

DIMENSION UNITS	SCALE
INCH/MM	NTS

GENERAL TOLERANCES (UNLESS SPECIFIED)

	mm	INCH
4 PLACES	±----	±----
3 PLACES	±----	±----
2 PLACES	±----	±----
1 PLACE	±----	±----
0 PLACES	±----	±----
ANGULAR TOL ±	---- °	

DRAFT WHERE APPLICABLE MUST REMAIN WITHIN DIMENSIONS

CURRENT REV DESC: ITEM# 1 & 5 WERE PVC. ADDED CABLE DIA. UPDATED TEMP RATING. MODIFIED MATERIAL TABLE

EC NO: 643513
DRWN: ABENJAMINLW 2020/07/28
CHK'D: RSTONE 2020/08/28
APPR: ---- ----

INITIAL REVISION:
DRWN: RSTONE 2017/05/02
APPR: BWOODMAN 2017/06/14

molex

MINI-CHANGE DEVICENET, A SIZE,
5 POLE, 90 DEGREE MALE TO STRAIGHT FEMALE, SINGLE KEY, 15/18 AWG

PRODUCT CUSTOMER DRAWING

DOCUMENT NUMBER	DOC TYPE	DOC PART	REVISION
SD-130025-029	PSD	001	B

THIRD ANGLE PROJECTION	DRAWING	SERIES	MATERIAL NUMBER	CUSTOMER	SHEET NUMBER
	C-SIZE	130025	SEE CHART	GENERAL MARKET	1 OF 1

DOCUMENT STATUS	RV	RELEASE DATE	2020/08/28 17:02:28

FORMAT: IN-ACAD-tb-prod-C
REVISION: B
DATE: 2020/01/14