PART NUMBER	ENGINEERING NO.	LENGTH
1300240133	DN90A-M010	3' 3" +2.19 - 0 [1.0M +55.6 - 0]
1300240136	DN90A-M030	9' 10" +3.50 - 0 [3.0M +88.9 - 0]
1300240137	DN90A-M050	16' 5" +6.50 - 0 [5.0M +165.1 - 0]

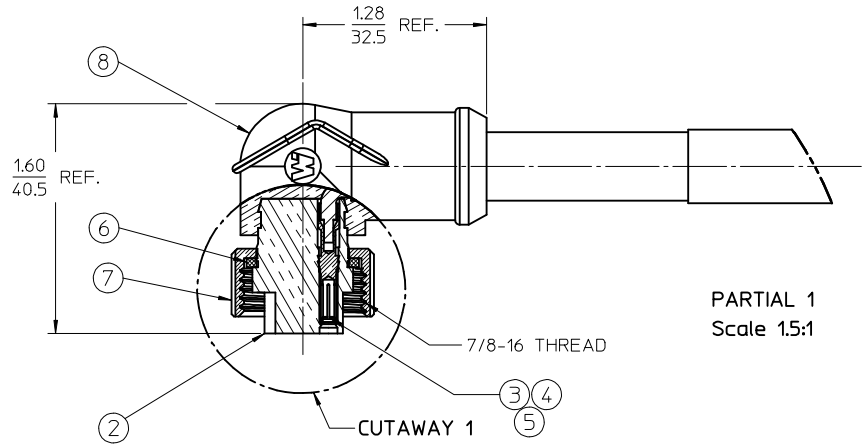

PARTIAL 1
Scale 1.5:1

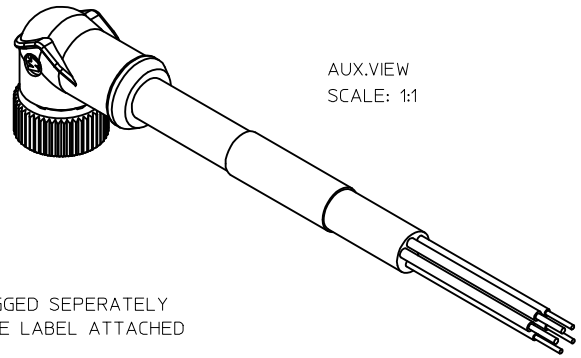

AUX.VIEW
SCALE: 1:1

NOTES:
1. MATERIAL: SEE TABLE
2. FINISHES: SEE TABLE
3. CABLE ASSEMBLIES ARE BAGGED SEPERATELY IN POLY BAGS WITH BARCODE LABEL ATTACHED TO OUTSIDE OF BAG
4. WRAP LABEL IS MARKED WITH P/N, DATE CODE VOLTAGE & AMPERAGE
5. MATES WITH: MINI CHANGE, A-SIZE 5 POLE RECEPTACLE
6. ELECTRICAL SPECIFICATIONS:
   VOLTAGE RATING: 300V
   CURRENT RATING: 4 AMPS
7. ASSEMBLY IS RoHS COMPLIANT

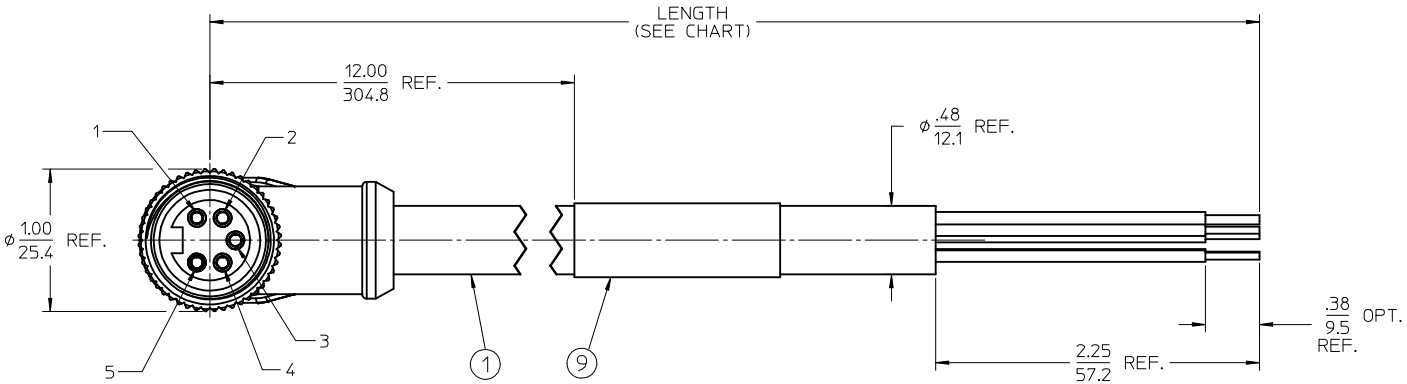

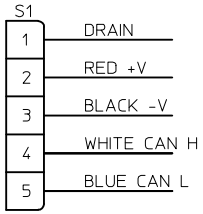

WIRING DIAGRAM

ITEM	QTY.	DESCRIPTION	MATERIAL	FINISH
9	1	LABEL	PLASTIC FILM	BLACK/YELLOW
8	1	OVERMOLD	PVC	GRAY
7	1	COUPLING NUT	ZINC DIE CAST	BLACK
6	1	FRICTION RING	NYLON	WHITE
5	5	SOCKET SLEEVE	ST. STEEL	
4	3	CONTACT SOCKET, 18 AWG	BRASS	GOLD PLATED
3	2	CONTACT SOCKET, 16 AWG	BRASS	GOLD PLATED
2	1	INSERT, FEMALE, 5 POLE	PVC	GRAY
1	1	CABLE, DEV-NET, TRUNK, 18/2, 15/2	PVC JACKET	GRAY

RELEASED
EC NO: WNA2009-0706 2009/05/07
DRWN:RSTONE
CHKD:B.WOODMAN
APPR: JFMURPHY 2009/05/15
DESCRIPTION
REV A

QUALITY SYMBOLS
▼=0
▽C=0

GENERAL TOLERANCES (UNLESS SPECIFIED)

	mm	INCH
4 PLACES	± ---	± ---
3 PLACES	± ---	± ---
2 PLACES	± ---	± .01
1 PLACE	± 0.3	± ---
ANGULAR ±1/2°		

DRAFT WHERE APPLICABLE MUST REMAIN WITHIN DIMENSIONS

DIMENSION STYLE: IN/MM
SCALE: 1.5:1
DESIGN UNITS: INCH
THIRD ANGLE PROJECTION

DRAWN BY: R.STONE DATE: 2009/05/06
CHECKED BY: B.WOODMAN DATE: 2009/05/08
APPROVED BY: J.MURPHY DATE: 2009/05/14

TITLE: MINI-CHANGE FEMALE, 5P 90 DEG, DEVICE NET CORD ASSEMBLY

molex MOLEX INCORPORATED

MATERIAL NO.: SEE CHART
DOCUMENT NO.: SD-130024-004
SHEET NO.: 1 OF 1
SIZE: C

THIS DRAWING CONTAINS INFORMATION THAT IS PROPRIETARY TO MOLEX INCORPORATED AND SHOULD NOT BE USED WITHOUT WRITTEN PERMISSION