PART NUMBER	ENGINEERING NUMBER	FINISH LENGTH
1300061402	105001A07M010	3′ 4″ [1M]
1300061404	105001A07M020	6′ 6″ [2M]
1300061408	105001A07M040	13′ 2″ [4M]
1300061409	105001A07M050	16′ 4″[5M]
1300061412	105001A07M100	32′ 4″ [10M]
1300061413	105001A07M150	49′ 2″ [15M]

CHART

CABLE LENGTH TOLERANCES
>.3M [1FT]: +19mm-0 [+.75in-0]
.3 - .9M [1 - 3FT]: +44.5mm-0 [+1.75in-0] B
.9 - 1.8M [3 - 6FT]: +55.6mm-0 [+2.19in-0]
1.8 - 3.7M [6 - 12FT: +88.9mm-0 [+3.50in-0]
3.7 - 7.3M [12 - 24FT]: +165.1mm-0 [+6.50in-0]
7.3-14.6M [24 - 48FT]: +317.5mm-0 [+12.50in-0]
14.6 - 30.5M [48-100FT]: +622.3mm-0 [+24.50in-0]
OVER 30M [100FT] +2% OF FINISHED LENGTH

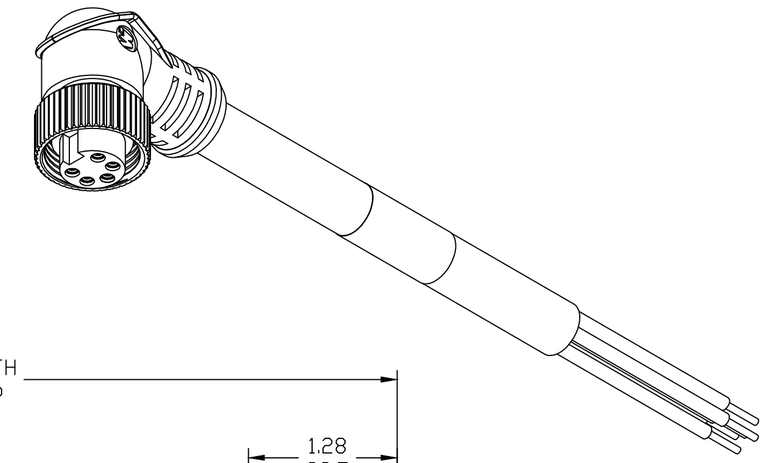

PART NUMBER LEGEND B

105001A07M010

CABLE TYPE
20/5 PVC

FINISHED LENGTH:
M005= 0.5 METER
M010= 1 METER
M100= 10 METER

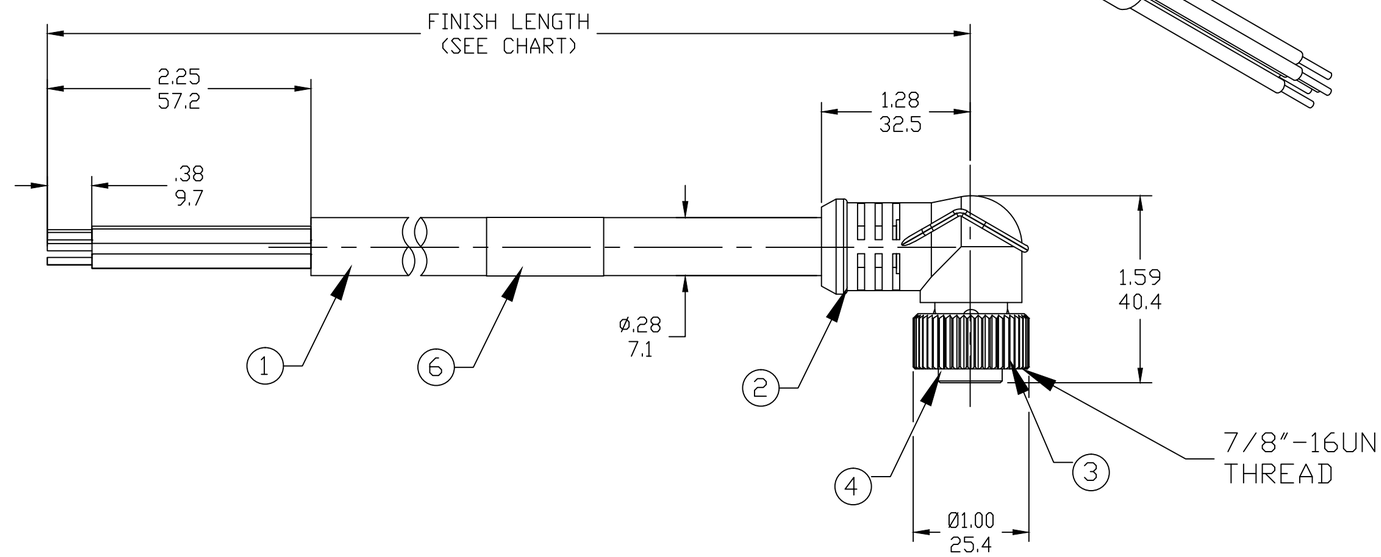

NOTES:
1. MATERIAL: AS NOTED
2. FINISH: AS NOTED
3. ELECTRICAL:
   VOLTAGE: 320V PER IEC60664
   300V PER UL2238
   CURRENT: 4A
4. TEMP RATING: -20° TO +90°C B
5. PROTECTION: IP67 (WHEN MATED)
6. CERTIFICATION:
   UL RECOGNITION FILE NO: E152210
   CSA CERTIFIED FILE NO: LR6837
7. ALL DIMS ARE FOR REFERENCE
   UNLESS NOTED OTHERWISE

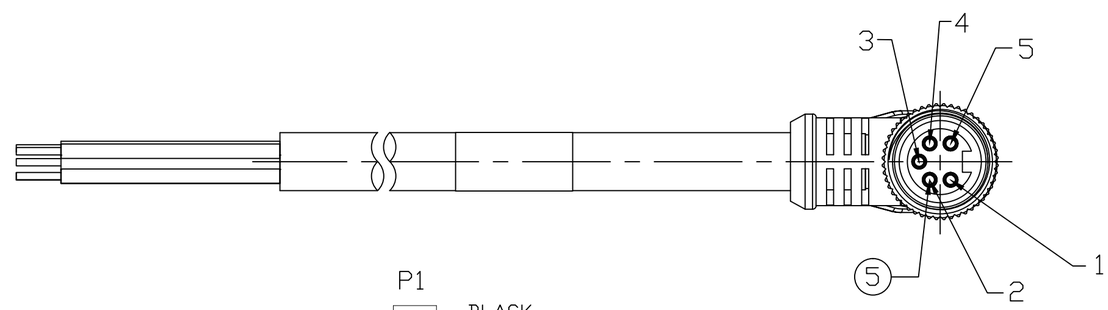

FEMALE
FACE VIEW

P1

1	BLACK
2	BLUE
3	GREEN/YELLOW-GND
4	BROWN
5	WIRING DIAGRAM

ITEM	DESCRIPTION	MATERIAL	FINISH
6	LABEL	VINYL	BLACK/YELLOW
5	CONTACT SOCKET	COPPER ALLOY	GOLD PLATED
4	INSERT	PVC	YELLOW
3	COUPLING NUT	ZINC DIE CAST	BLACK E-COATED
2	OVERMOLD	PVC	YELLOW
1	CABLE, 20AWG, 5C	PVC	YELLOW

REV	DESCRIPTION
B	REV NOTE 3, ADD P/N LEGEND EC NO: IPG2017-0829 3/2/17 DRWN: RSTONE 2017/03/10 CH'KD: K COX APPR: BWOODMAN2010/01/07

QUALITY SYMBOL
▼=0
C=0

GENERAL TOLERANCES (UNLESS SPECIFIED)

	mm	INCH
4 PLACES	±---	±---
3 PLACES	±---	±---
2 PLACES	±---	±---
1 PLACE	±---	±---
ANGULAR ±---°		

DRAFT WHERE APPLICABLE MUST REMAIN WITHIN DIMENSIONS

DIMENSION STYLE: IN/MM
SCALE: 1:1
DESIGN UNITS: INCH
THIRD ANGLE PROJECTION

DRAWN BY: BWOODMAN DATE: 2009/12/30
CHECKED BY: VOU DATE: 2009/12/30
APPROVED BY: JFMURPHY DATE: 2010/01/07

TITLE: MINI CHANGE ASSEMBLY
5-POLE FEMALE 90D
20/5 AWG PVC IEC

molex MOLEX INCORPORATED

MATERIAL NO.: SEE CHART
DOCUMENT NO.: SD-130006-033
SHEET NO.: 1 0F 1
SIZE: C

THIS DRAWING CONTAINS INFORMATION THAT IS PROPRIETARY TO MOLEX INCORPORATED AND SHOULD NOT BE USED WITHOUT WRITTEN PERMISSION