PART NUMBER	UPC CODE
LS7R04002PS00L	07945829343

REVISION		
REV	DATE	DESCRIPTION
A	6/15/21	523719GCP - RELEASE PER EM3236 MRY

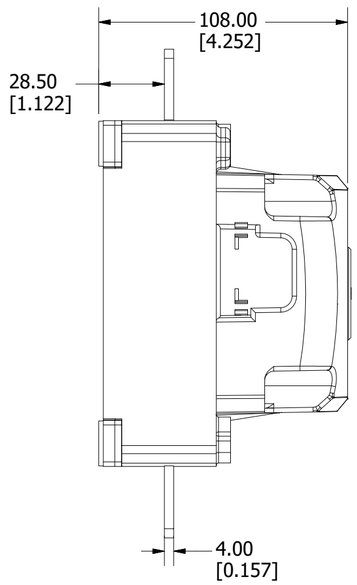

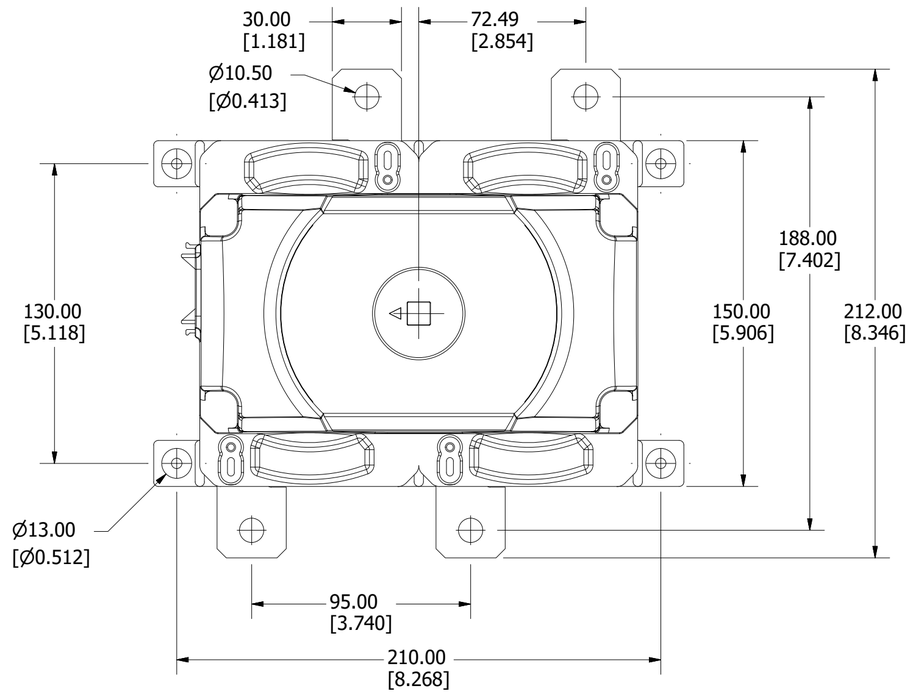

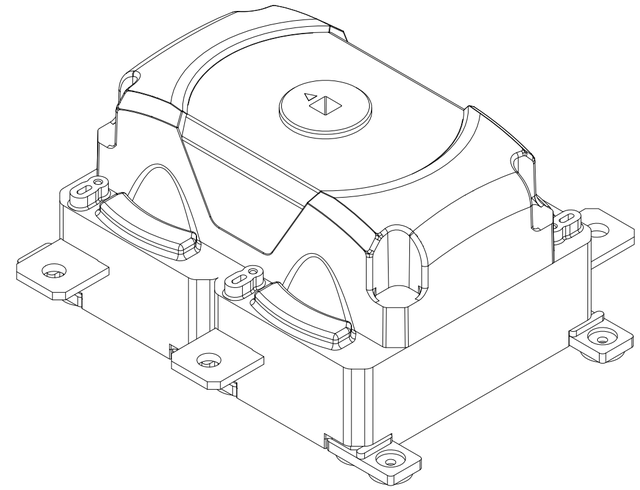

PRODUCT MARKING

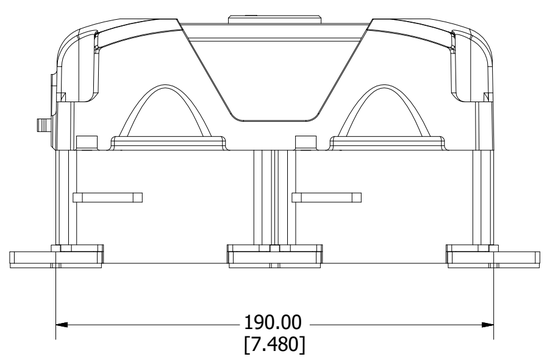

<S>	CRITICAL CHARACTERISTIC FOR PART SAFETY/COMPLIANCE
●	DENOTES CRITICAL CHARACTERISTICS.
CPK	DENOTES CPK DIMENSIONS, -MINIMUM CPK VALUE
⟨ST⟩	DENOTES A CHARACTERISTIC THAT PROVIDES AN INDICATION OF PROCESS PERFORMANCE. PROCEDURE FOR MEASUREMENT AND TRACKING TO BE DEFINED IN LITTELFUSE INSPECTION INSTRUCTIONS.
CP	DENOTES CP DIMENSIONS, -MINIMUM CP VALUE MUST BE WITHIN THE DIMENSIONAL LIMITATIONS SHOWN ON DRAWING AND INITIALLY LOCATED TO ALLOW FOR MAXIMUM TOOL LIFE.

C

MATL SPEC		FINISH	
DRW myork	DATE 5/13/2021	SCALE NTS	FINISH GOOD WT GRAMS/PIECE

UNLESS OTHERWISE SPECIFIED, DIMENSIONS ARE IN MILLIMETERS, DIMENSIONS IN BRACKETS [ ] ARE INCHES DIMENSIONING AND DO NOT INCLUDE PLATING. TOLERANCING TO BE INTERPRETED IN ACCORDANCE WITH ANSI Y14.5M-1994

3RD ANGLE PROJECTION

TITLE DISCONNECT SWITCH 400A 1500VDC 2 POLE OUTLINE

Littelfuse®
CHICAGO, ILLINOIS 60631

REVISION	DRWG NO.	SHEET 1 OF 1
A	OL-LS7R04002PS00L	