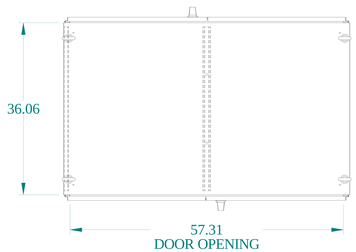

TOP VIEW

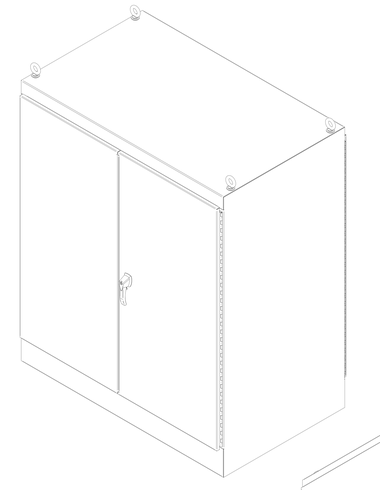

ISOMETRIC VIEWS

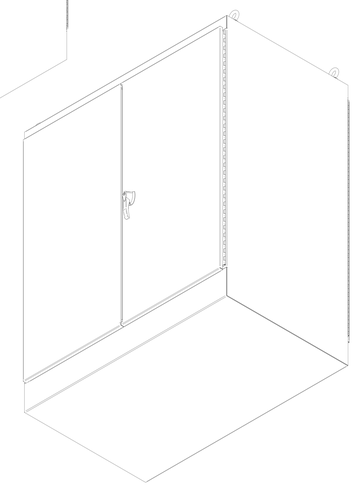

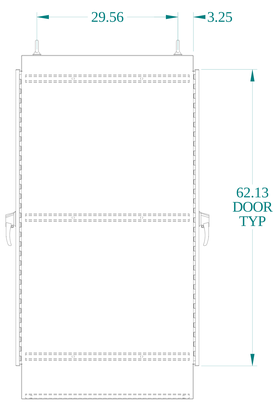

SIDE DOOR

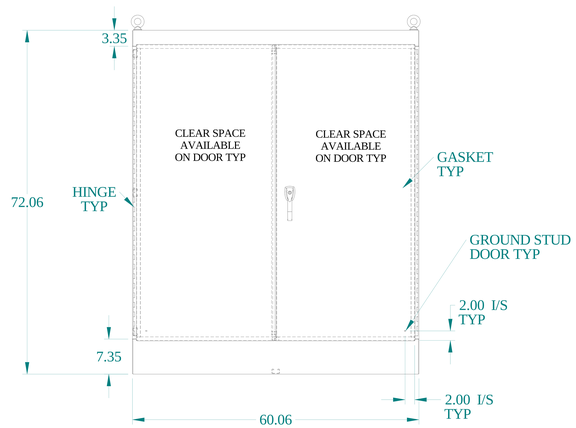

FRONT VIEW

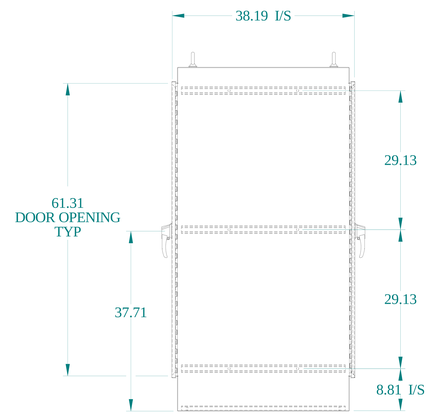

SIDE DOOR

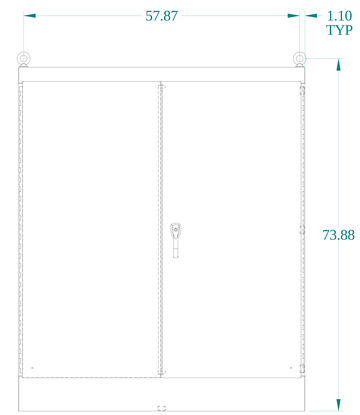

BACK VIEW

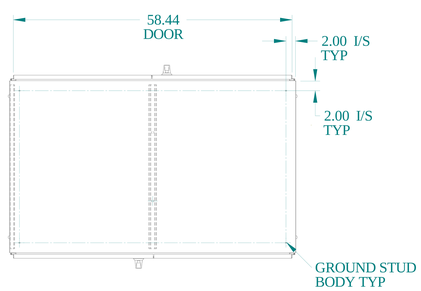

BOTTOM VIEW

HAMMOND MANUFACTURING®

www.hammondmfg.com

Data subject to change without notice.

Part # : 1418ZXD36	Date : Jul. 10, 2025

Link:www.hammfg.com/1418ZXD36