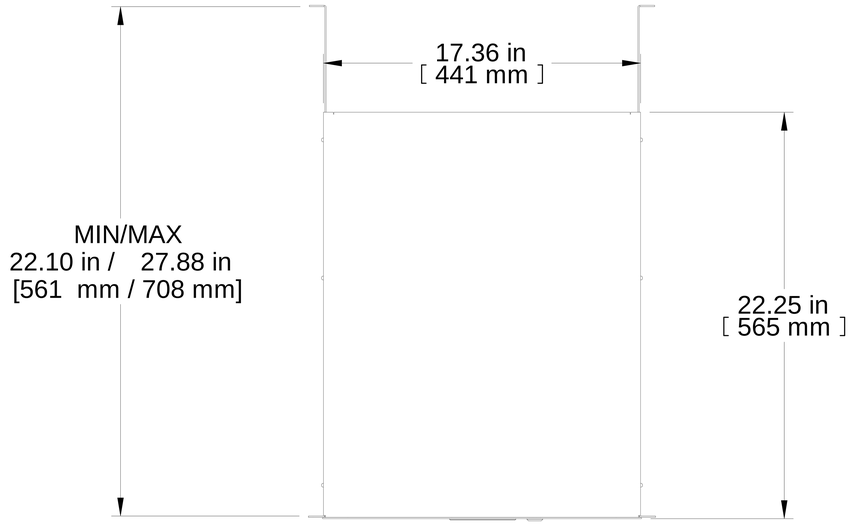

TOP VIEW

L.S. VIEW

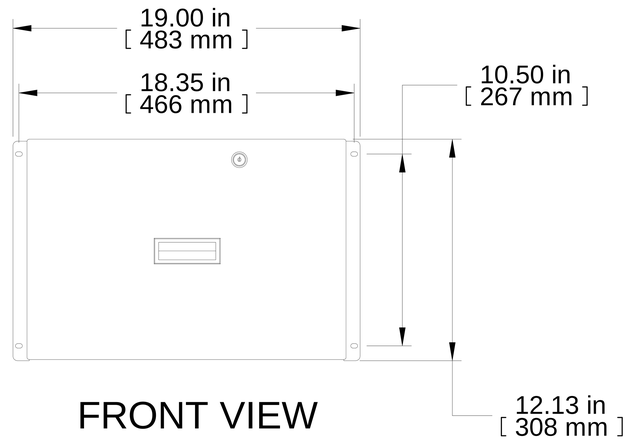

FRONT VIEW

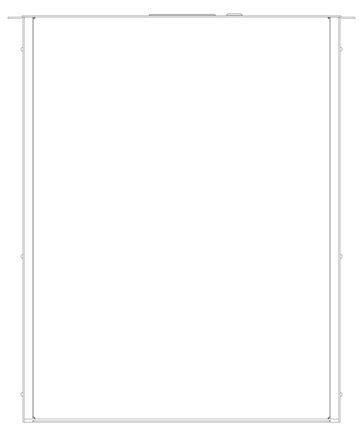

BOTTOM VIEW

R.S. VIEW

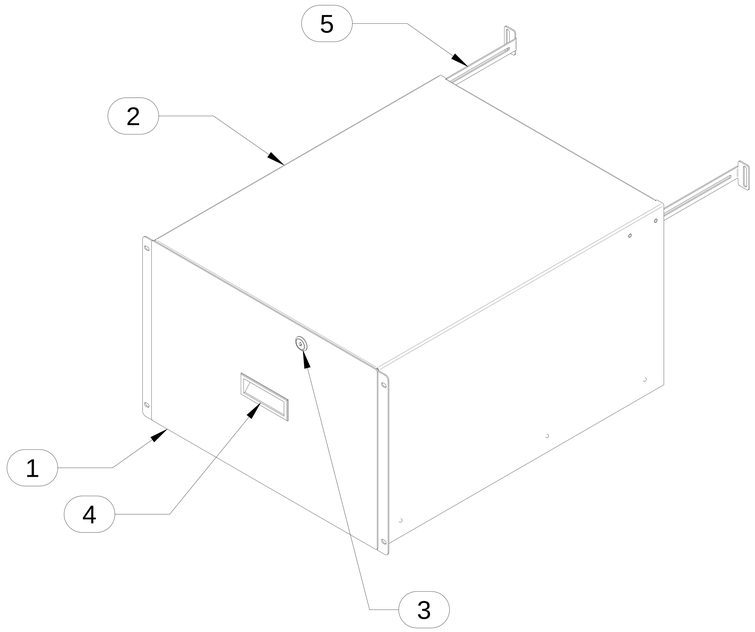

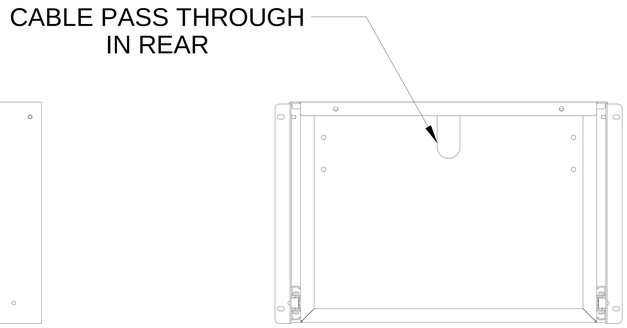

REAR VIEW

Item Number	Title	Quantity
1	RDRW - DRAWER BODY (1901222)	1
2	RDRW - SHROUD (1901222)	1
3	LOCK KEY-LOCK W/NUT 7.5MM	1
4	PLASTIC HANDLE	1
5	RDRW - REAR MOUNTING BRACKET	2

PART NUMBERS

RDRW1901222

NOTES

Rear Support Brackets Included
Mounting Hardware Not Included
See Hammond Website for More Information

Français

Pour tous les détails sur nos produits,
svp veuillez consulter notre site www.hammondmfg.com

Data subject to change without notice. Isometric drawing not to scale.
Les données sont sujettes à changement sans préavis.

HAMMOND MANUFACTURING®

www.hammondmfg.com

PART NO. **RDRW1901222BK1**