TOP VIEW

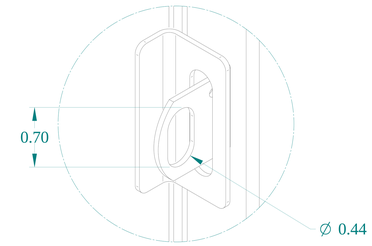

DETAIL Z

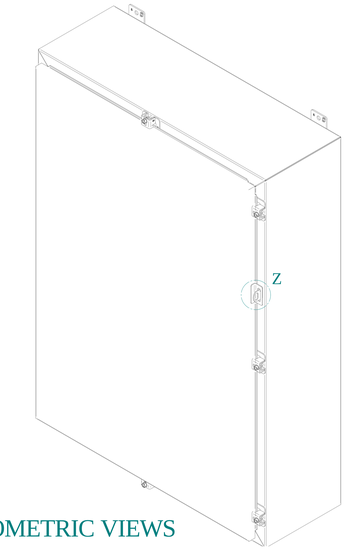

ISOMETRIC VIEWS

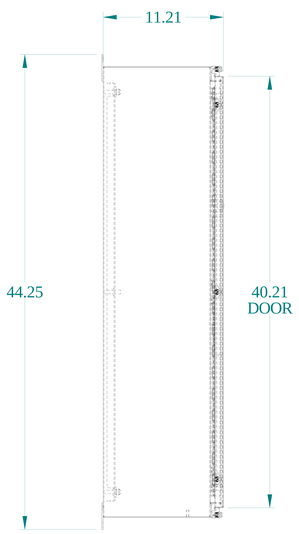

SIDE VIEW

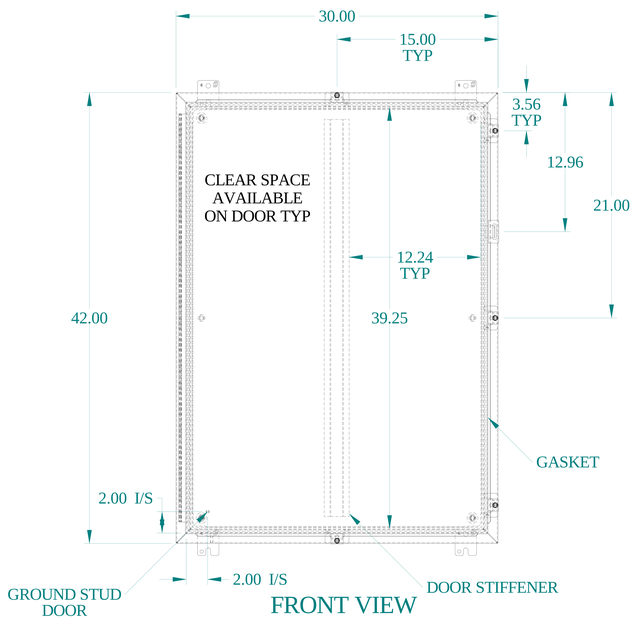

FRONT VIEW

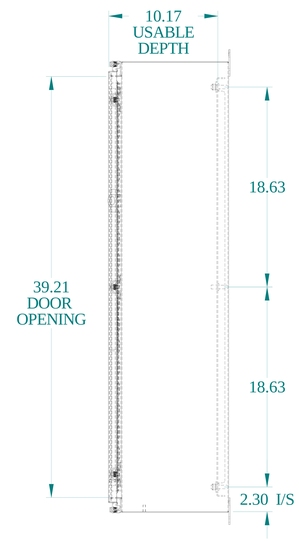

SIDE VIEW

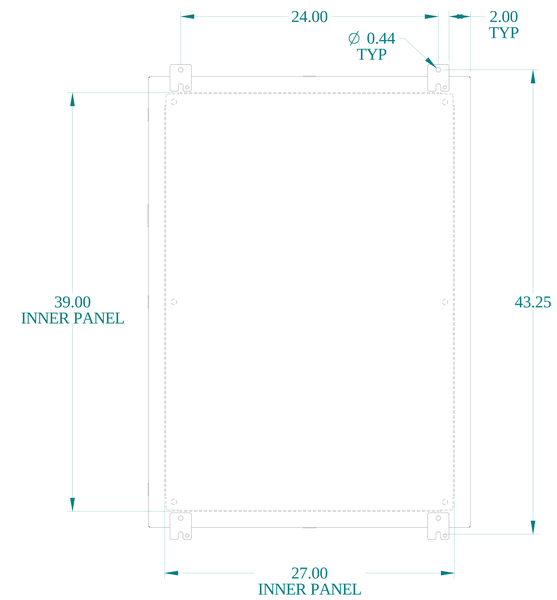

BACK VIEW

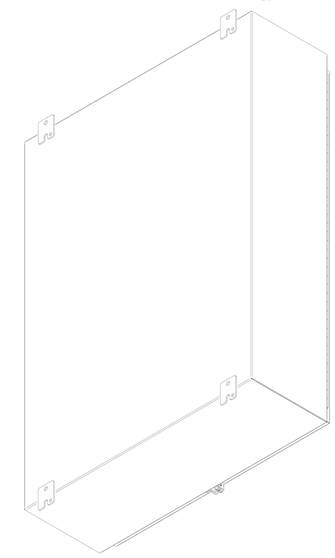

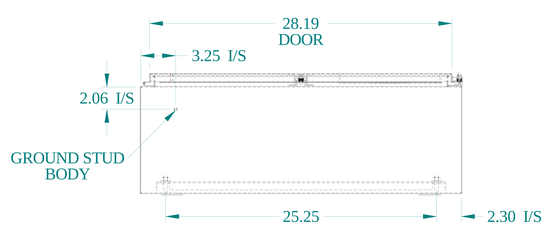

BOTTOM VIEW

HAMMOND MANUFACTURING®

www.hammondmfg.com

Data subject to change without notice.

Part # : 1418N4S16O10	Date : Sep. 6, 2022

Link:www.hammfg.com/1418N4S16O10