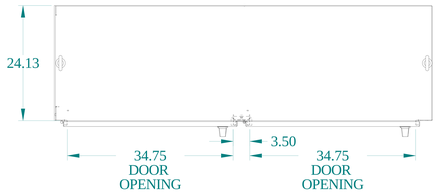

TOP VIEW

ISOMETRIC VIEWS

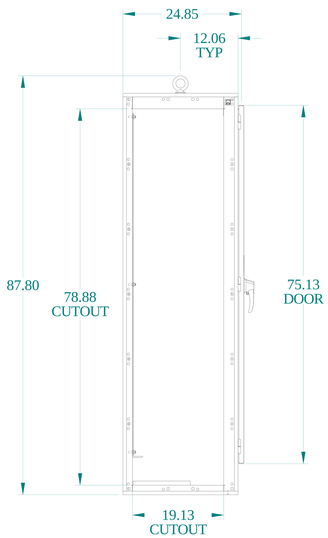

SIDE VIEW

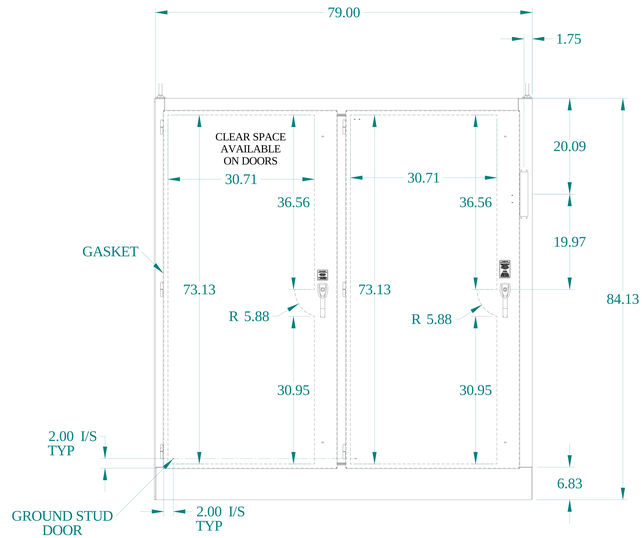

FRONT VIEW

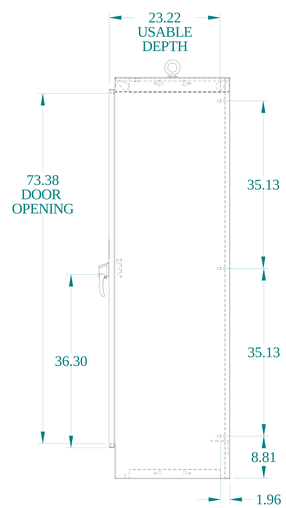

SIDE VIEW

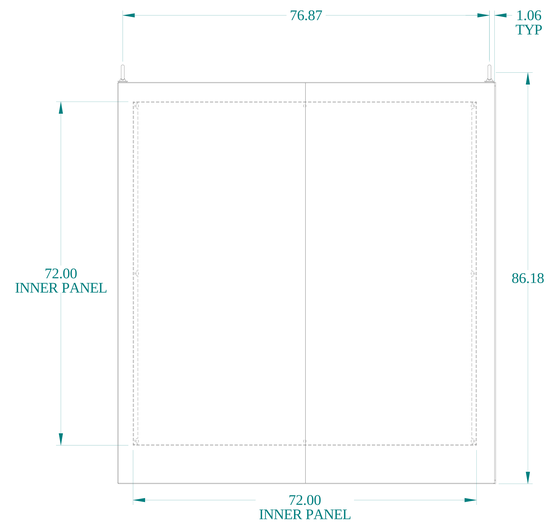

BACK VIEW

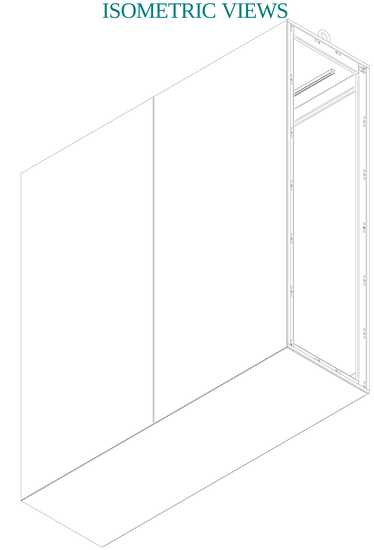

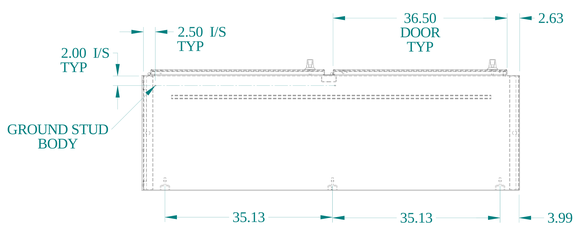

BOTTOM VIEW

HAMMOND MANUFACTURING®

www.hammondmfg.com

Data subject to change without notice.

Part # : UHDM847924MFTC	Date : Sep. 27, 2024

Link:www.hammfg.com/UHDM847924MFTC