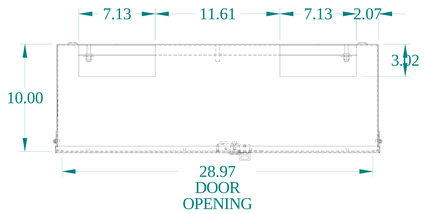

TOP VIEW

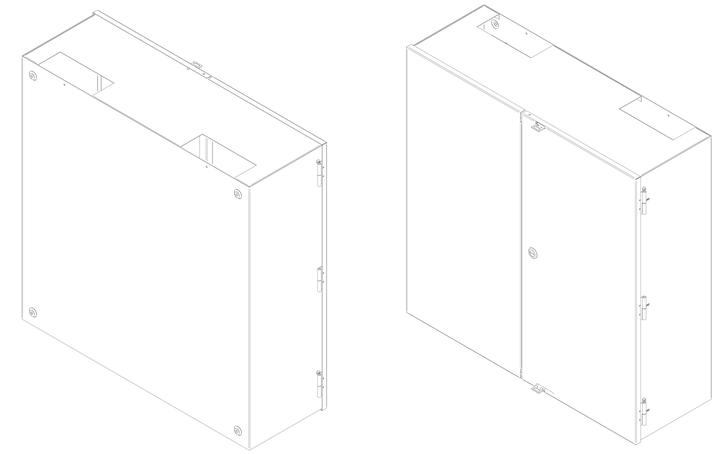

ISOMETRIC VIEWS

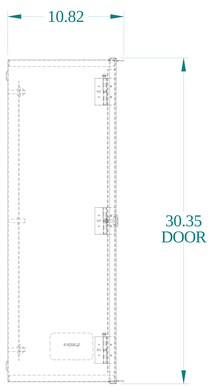

SIDE VIEW

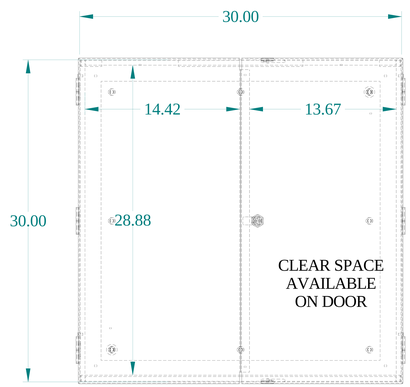

FRONT VIEW

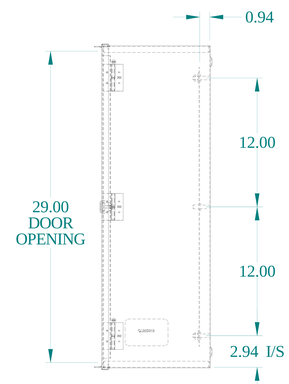

SIDE VIEW

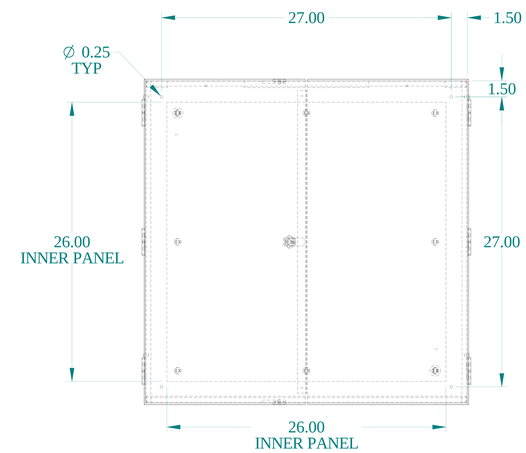

BACK VIEW

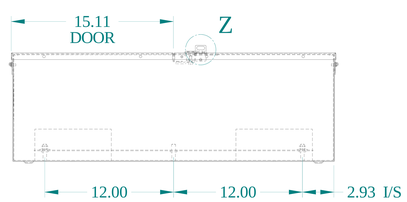

BOTTOM VIEW

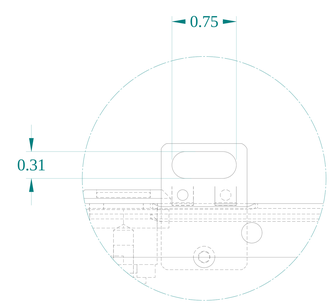

DETAIL Z

HAMMOND MANUFACTURING®

www.hammondmfg.com

Data subject to change without notice.

Part # : CMC303010	Date : Jan. 6, 2026

Link:www.hammfg.com/CMC303010