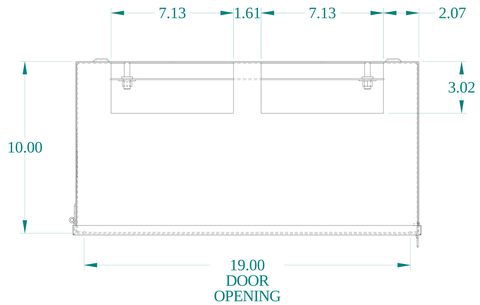

TOP VIEW

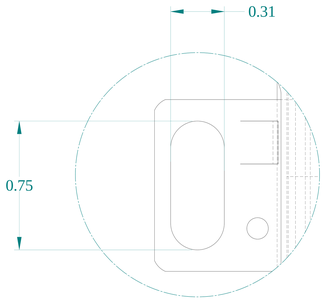

DETAIL Z
TYP

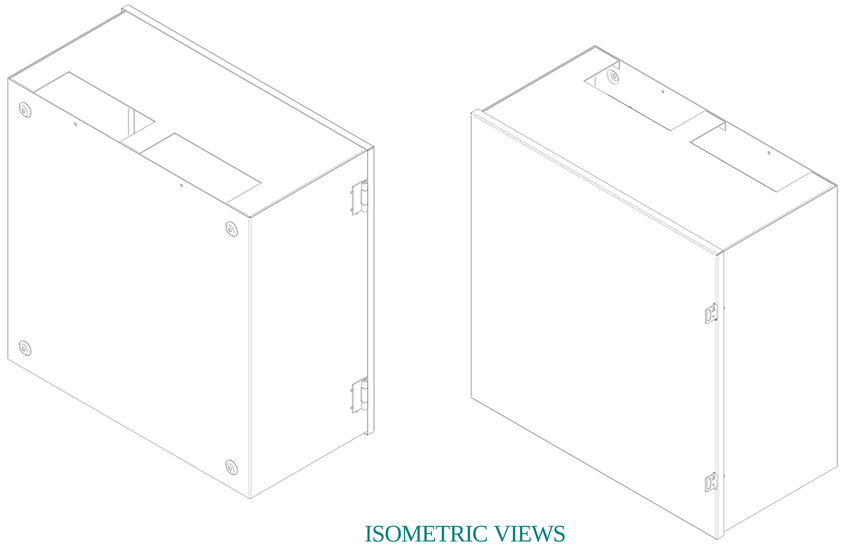

ISOMETRIC VIEWS

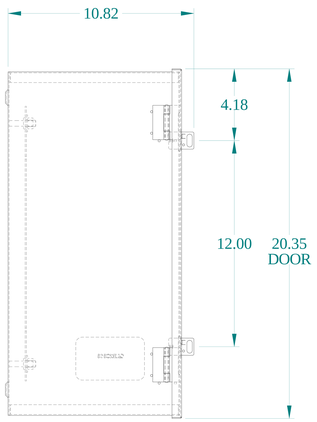

SIDE VIEW

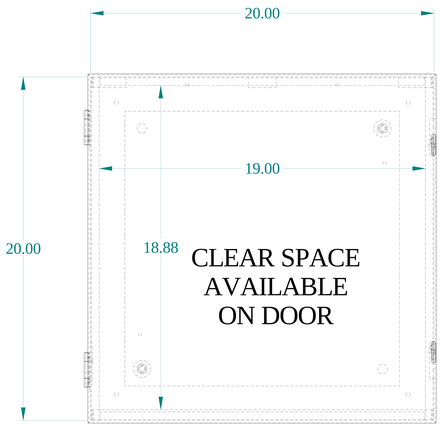

FRONT VIEW

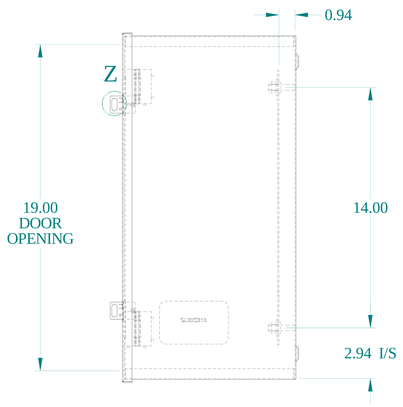

SIDE VIEW

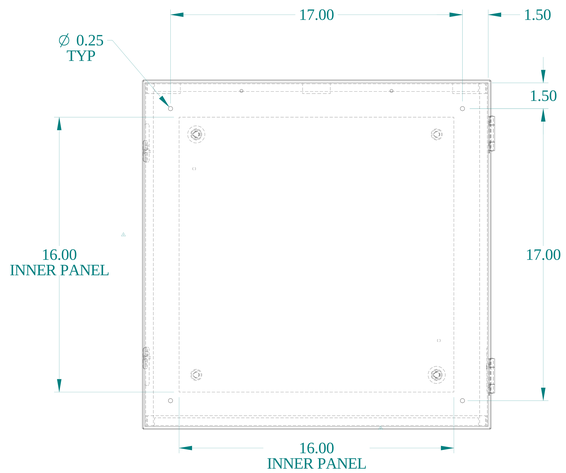

SIDE VIEW

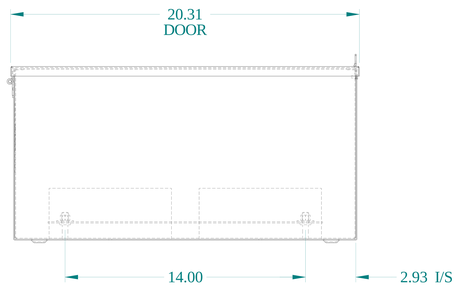

BOTTOM VIEW

HAMMOND MANUFACTURING®

www.hammondmfg.com

Data subject to change without notice.

Part # : CMC202010	Date : Jan. 6, 2026

Link:www.hammfg.com/CMC202010