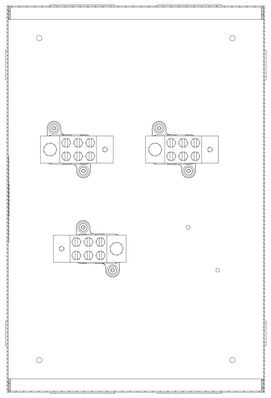

SECTION V-V

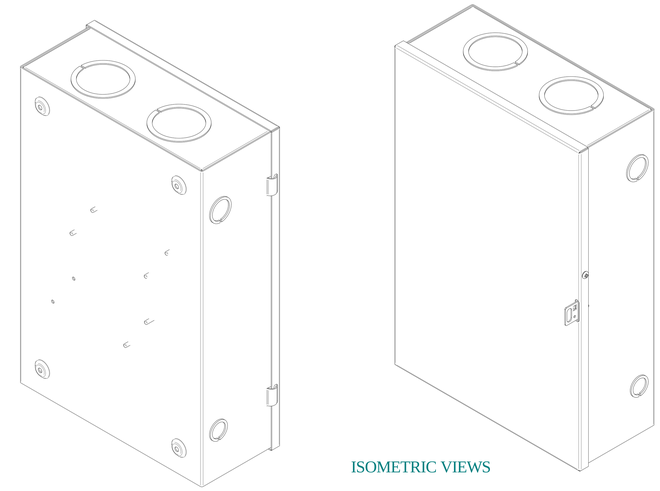

ISOMETRIC VIEWS

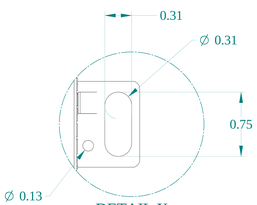

DETAIL X

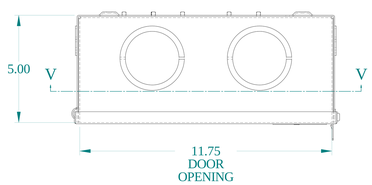

TOP VIEW

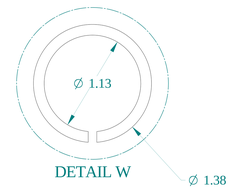

DETAIL W

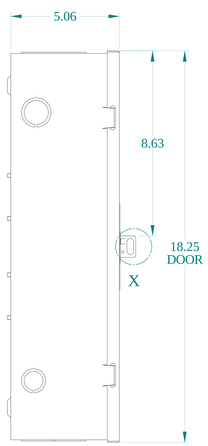

SIDE VIEW

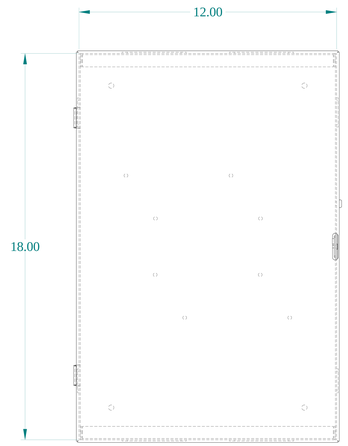

FRONT VIEW

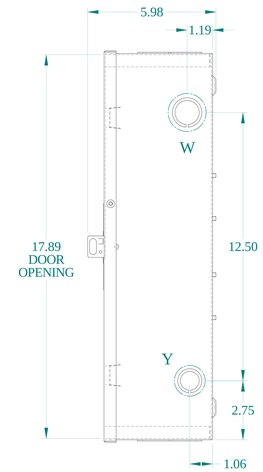

SIDE VIEW

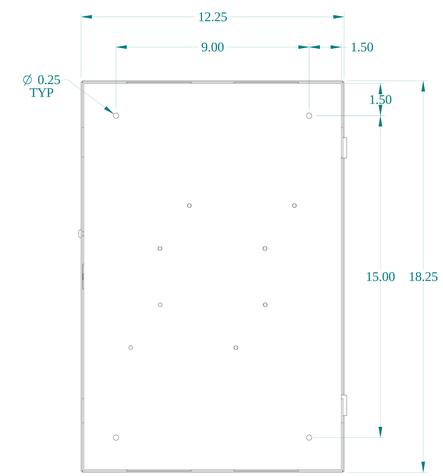

BACK VIEW

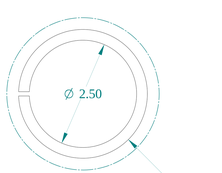

DETAIL Z
TYP

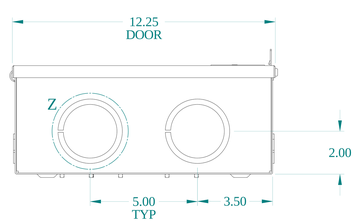

BOTTOM VIEW

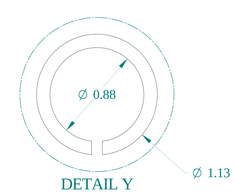

DETAIL Y

HAMMOND MANUFACTURING®

www.hammondmfg.com

Data subject to change without notice.

Part # : CSB203	Date : Nov. 4, 2020

Link:www.hammfg.com/CSB203