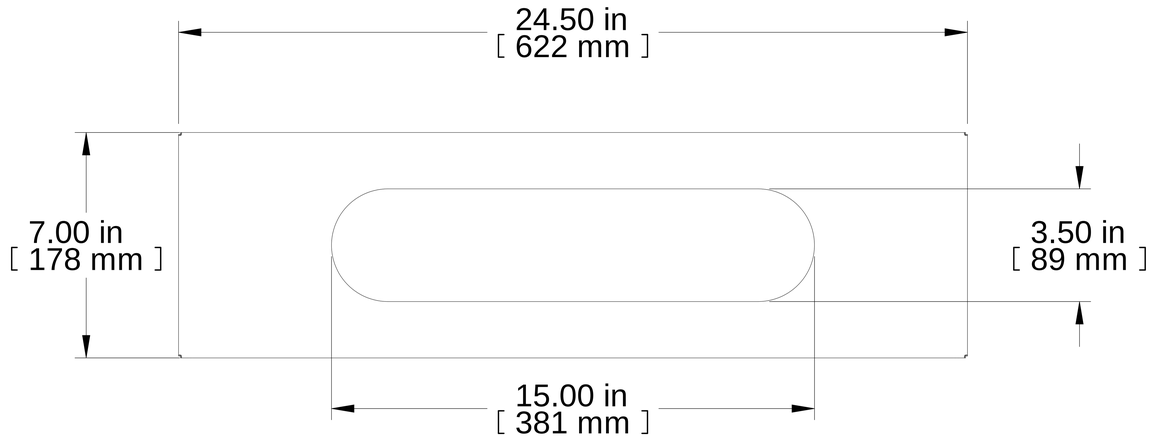

TOP VIEW

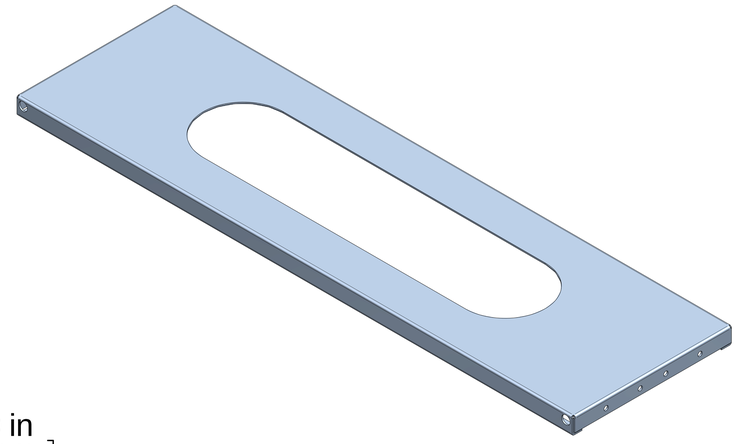

ISOMETRIC

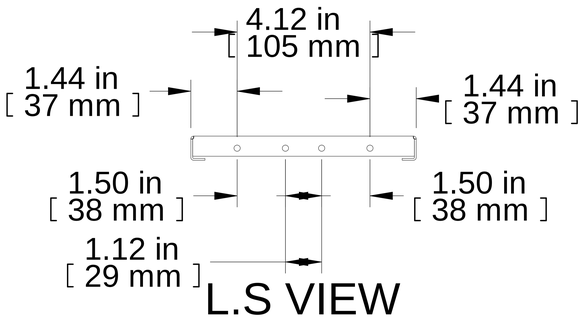

L.S VIEW

FRONT VIEW

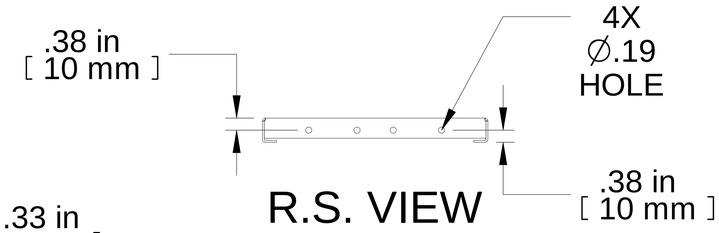

R.S. VIEW

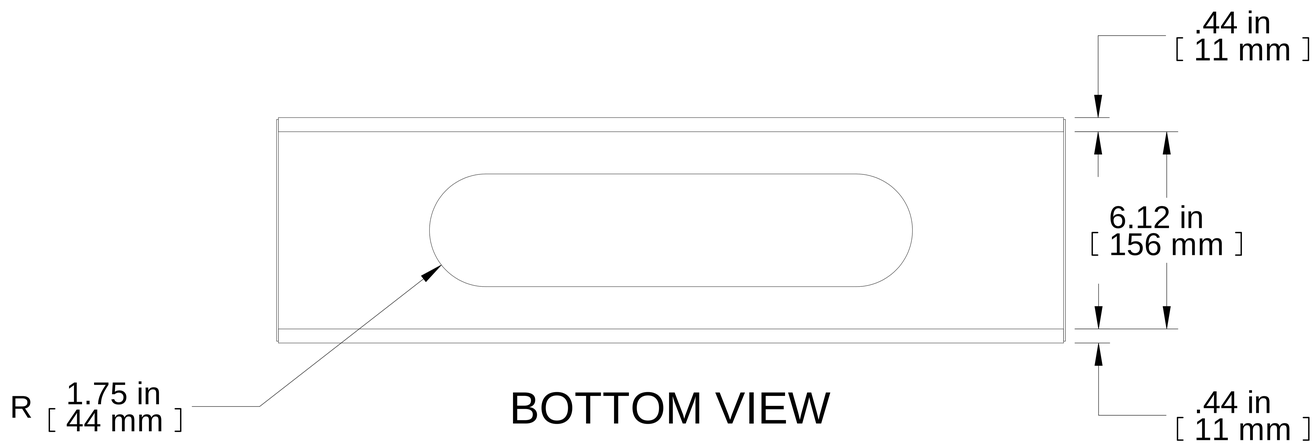

BOTTOM VIEW

PART NUMBERS	
CCE2475BK1	PAINTED BLACK TEXTURED

NOTES

Notes: Rubber Edging for cable opening included

Hardware: Mounting hardware included

See Hammond Website for additional Accessories

Français

Pour tous les détails sur nos produits,
svp veuillez consulter notre site www.hammondmfg.com

Data subject to change without notice. Isometric drawing not to scale.
Les données sont sujettes à changement sans préavis.

HAMMOND MANUFACTURING®

www.hammondmfg.com

PART NO. CCE2475