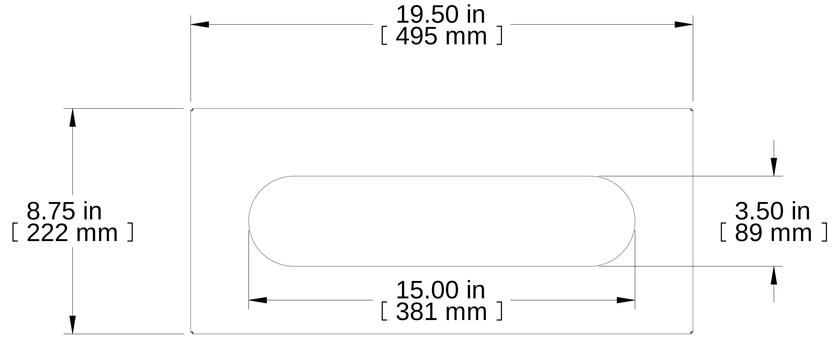

FRONT VIEW

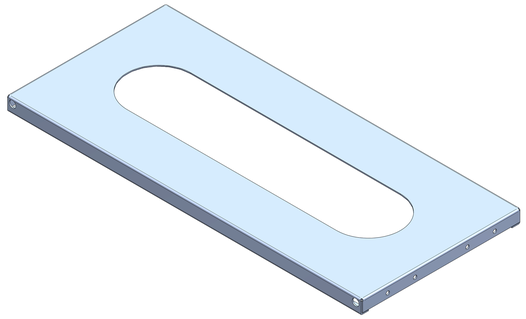

ISOMETRIC

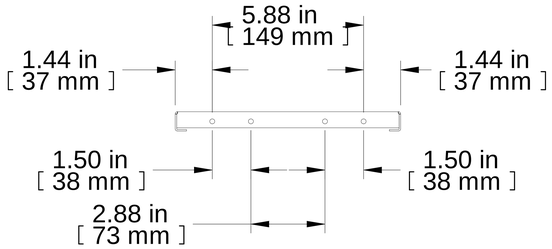

L.S. VIEW

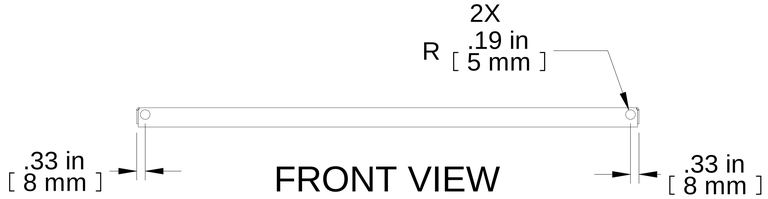

FRONT VIEW

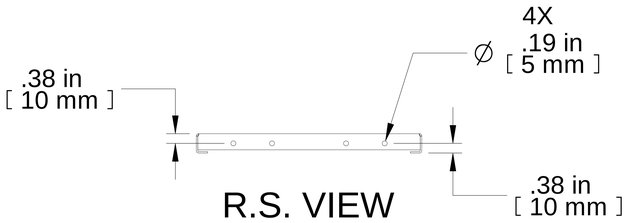

R.S. VIEW

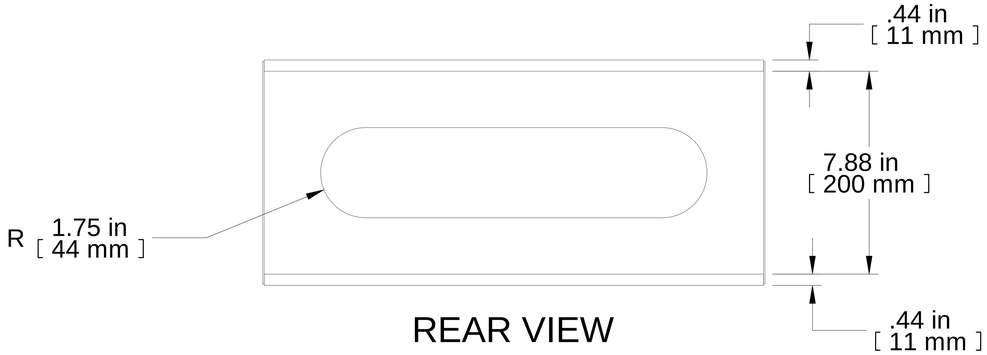

REAR VIEW

Item Number	Title	Quantity
1*	CABLE ENTRY PANEL	1
PART NUMBERS		
CCE1985BK1	PAINTED BLACK TEXTURE	
NOTES		
Notes: Rubber Edging for cable opening included		
Hardware: Mounting hardware included		
See Hammond Website for additional Accessories		
Français		
Pour tous les détails sur nos produits, svp veuillez consulter notre site www.hammondmfg.com		

Data subject to change without notice. Isometric drawing not to scale.
Les données sont sujettes à changement sans préavis.

HAMMOND MANUFACTURING®

www.hammondmfg.com

PART NO. **CCE1985**