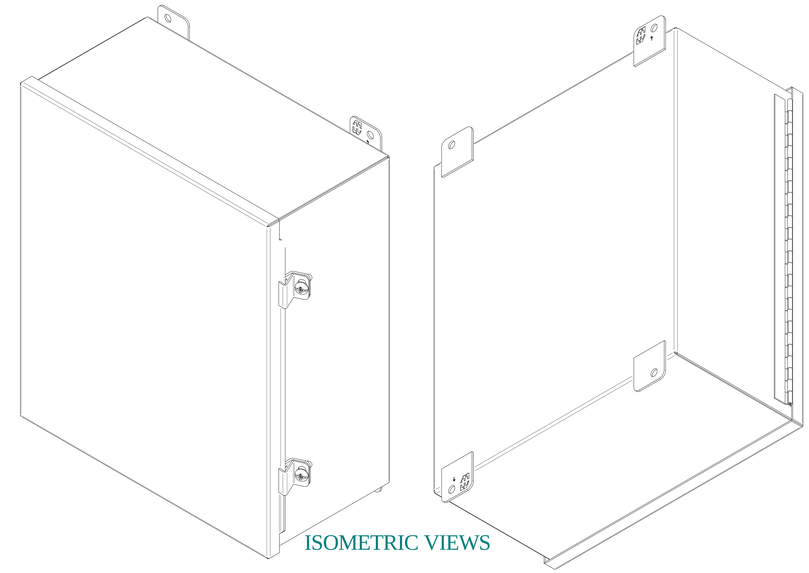

ISOMETRIC VIEWS

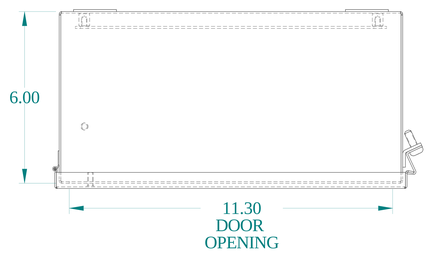

TOP VIEW

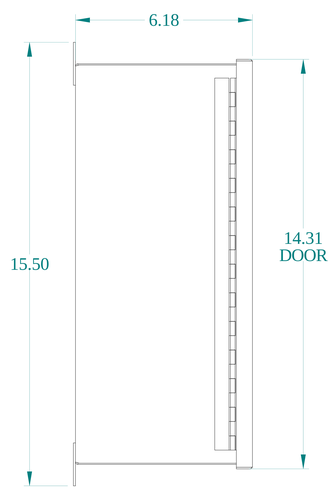

SIDE VIEW

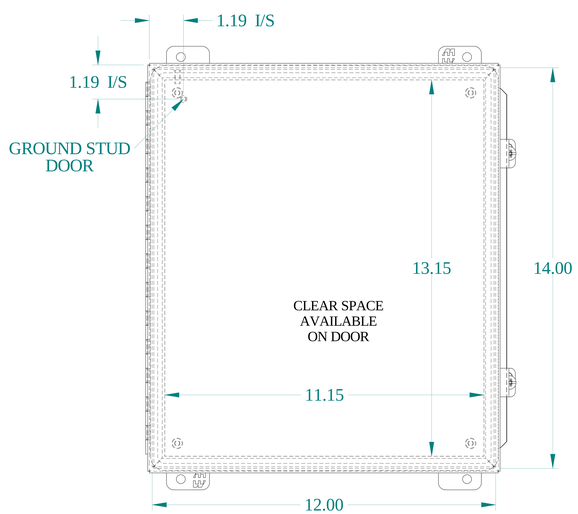

FRONT VIEW

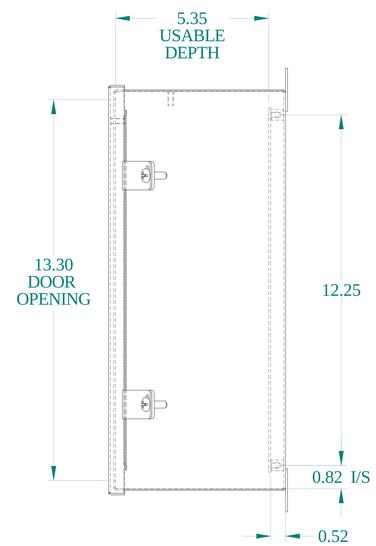

SIDE VIEW

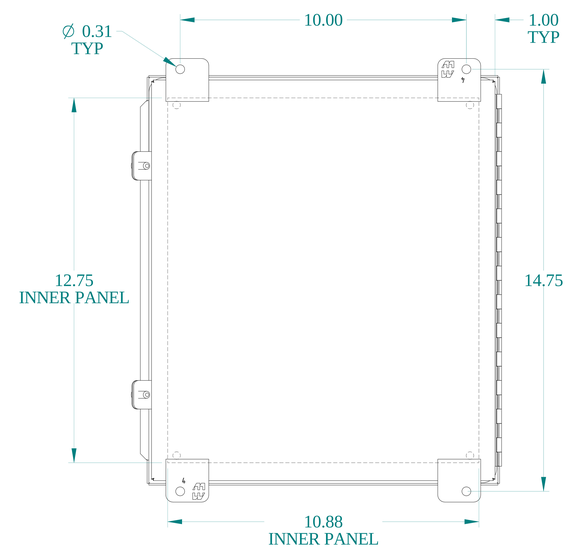

BACK VIEW

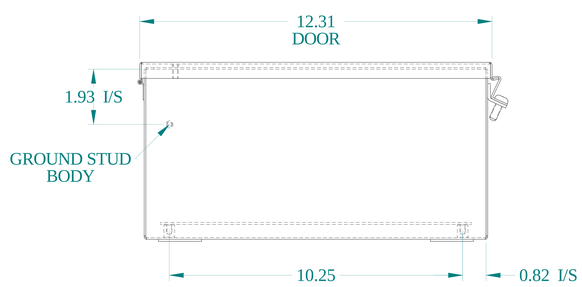

BOTTOM VIEW

HAMMOND MANUFACTURING®

www.hammondmfg.com

Data subject to change without notice.

Part # : 1414N4PHSSM6	Date : May. 30, 2025

Link:www.hammfg.com/1414N4PHSSM6