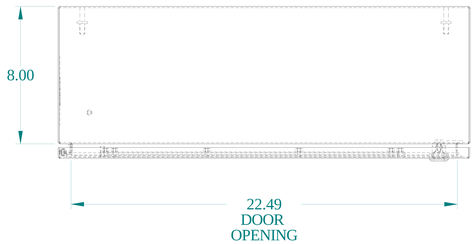


TOP VIEW

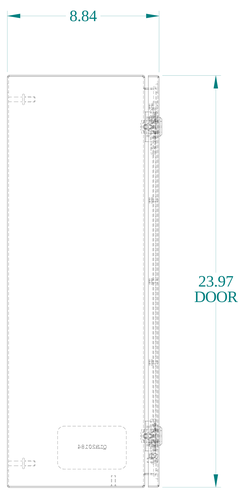


SIDE VIEW

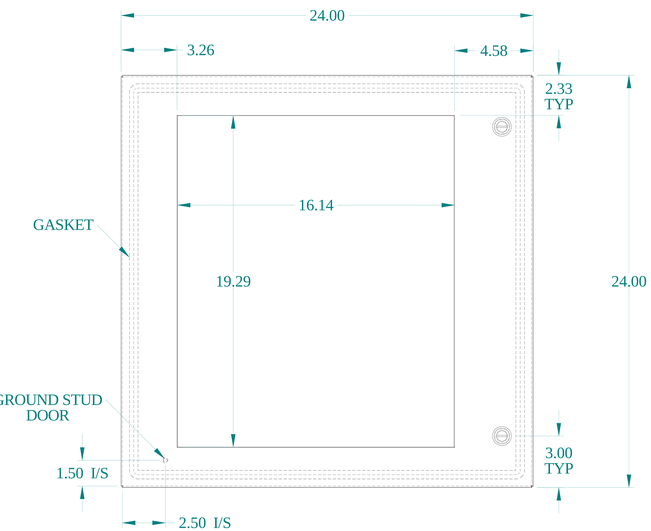


FRONT VIEW

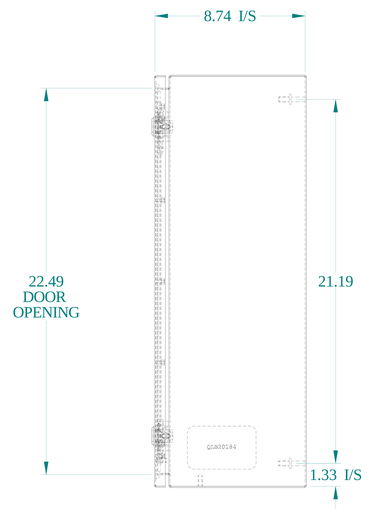


SIDE VIEW

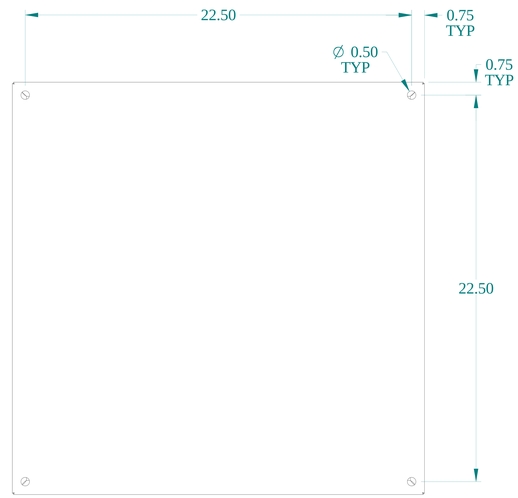


BACK VIEW

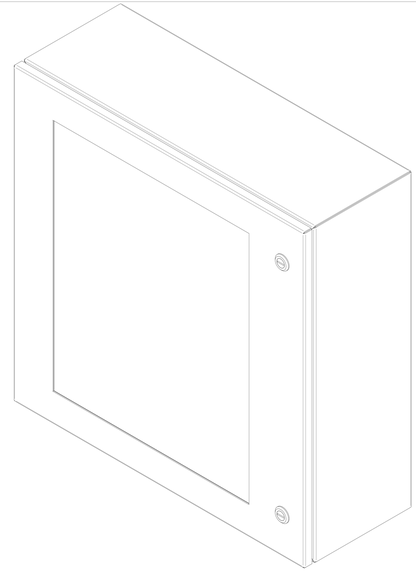

ISOMETRIC VIEWS

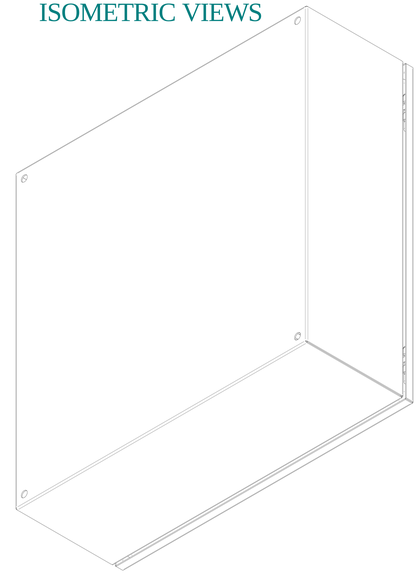

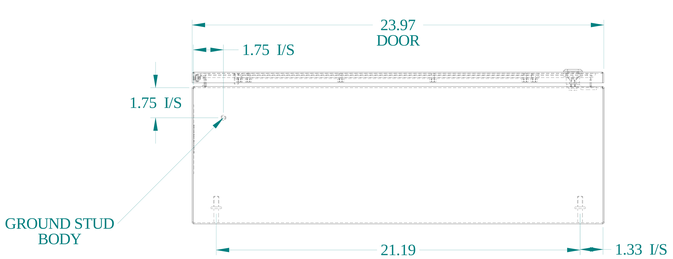


BOTTOM VIEW

HAMMOND MANUFACTURING®

www.hammondmfg.com

Data subject to change without notice.

| | |
|---|---|
| Part # : EN4SD24248WSS | Date : Feb. 25, 2025 |

Link:www.hammfg.com/EN4SD24248WSS