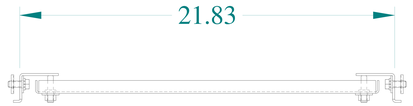

TOP VIEW

SIDE VIEW

FRONT VIEW

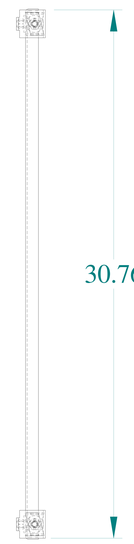

SIDE VIEW

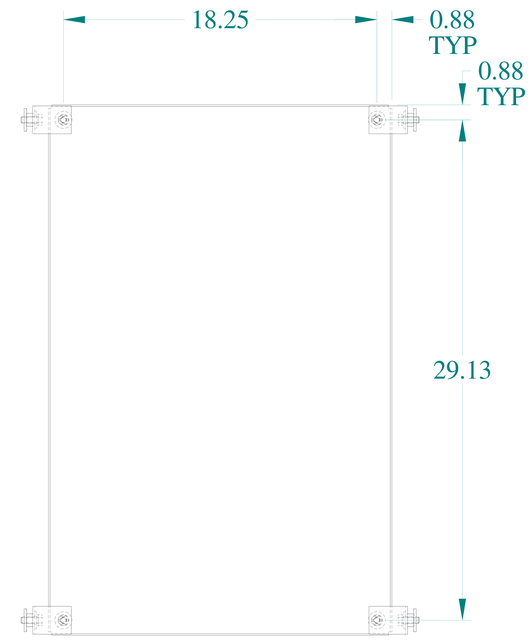

BACK VIEW

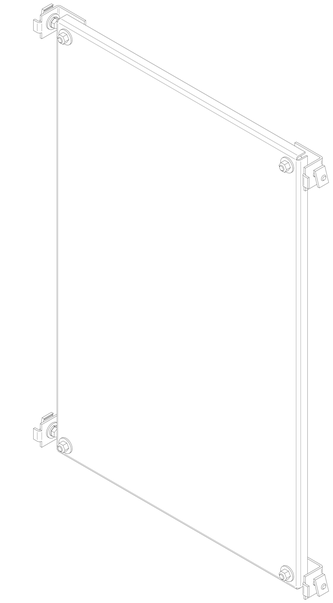

ISOMETRIC VIEWS

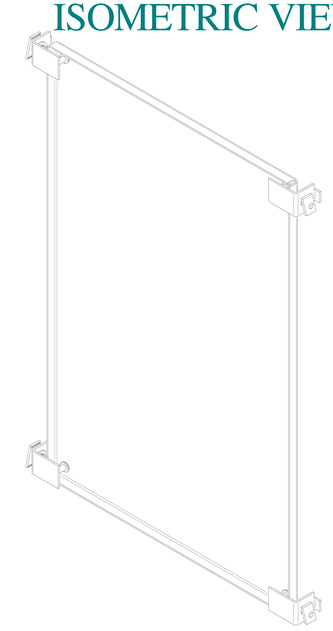

BOTTOM VIEW

HAMMOND MANUFACTURING®

www.hammondmfg.com

Data subject to change without notice.

Part # : 72WHW	Date : Feb 10, 2020

Link:www.hammfg.com/72WHW