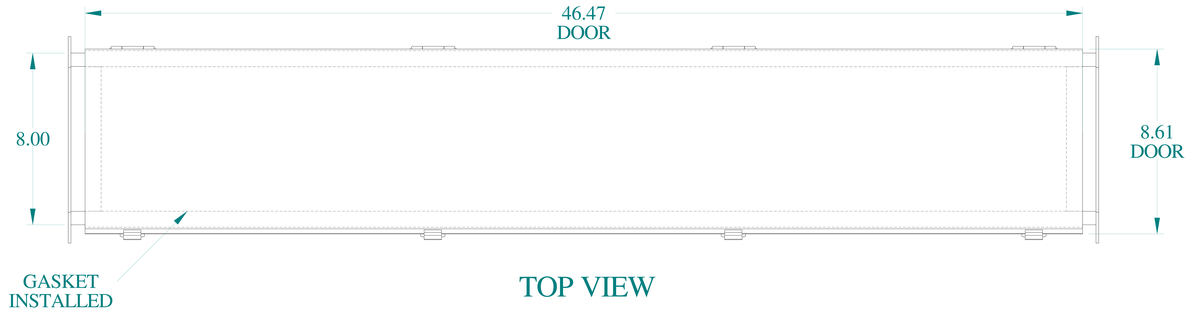

TOP VIEW

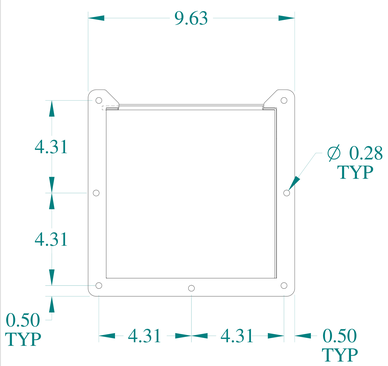

SIDE VIEW

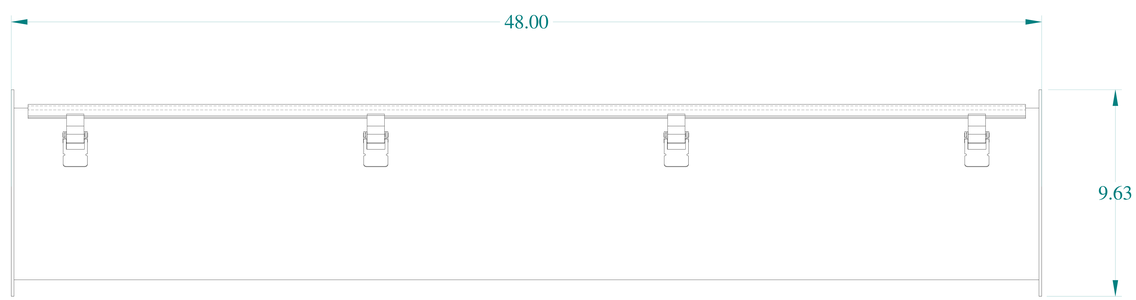

FRONT VIEW

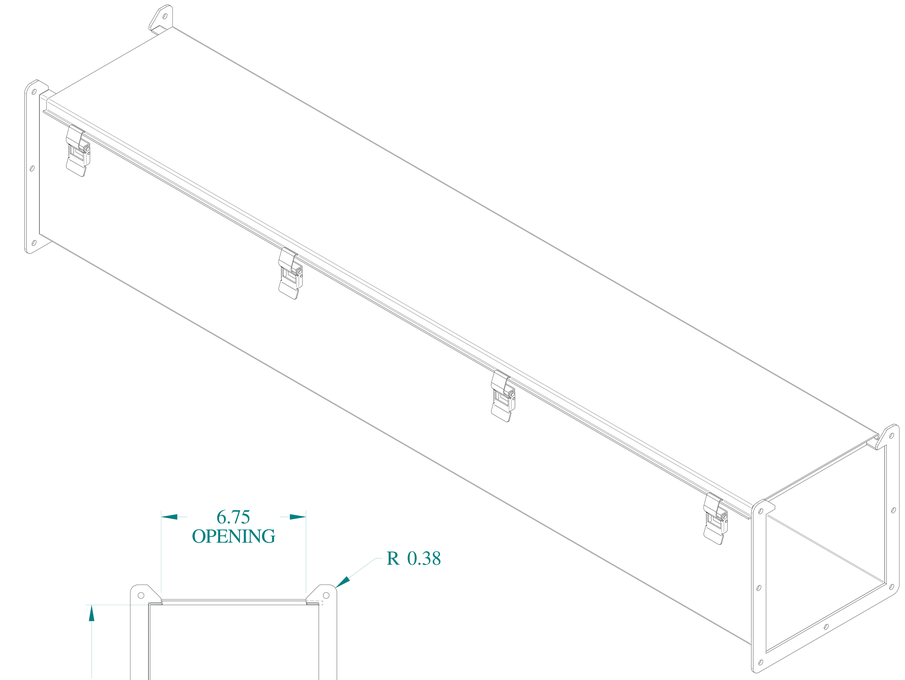

ISOMETRIC VIEWS

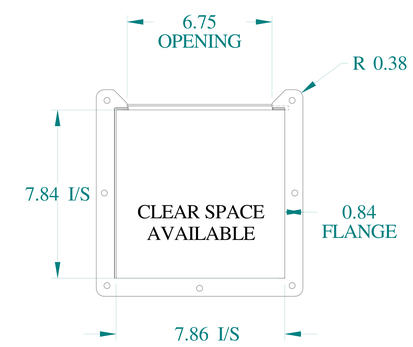

SIDE VIEW

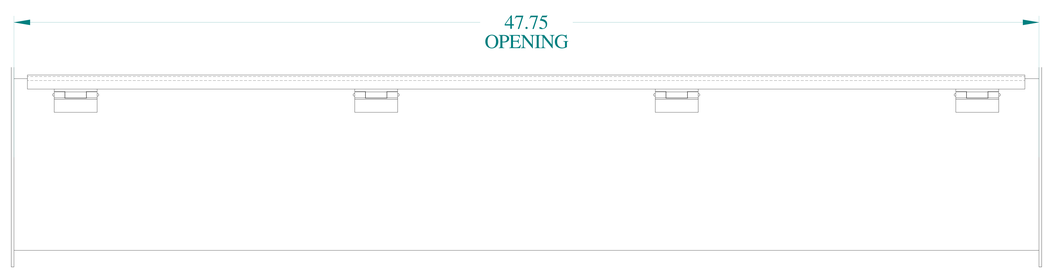

BACK VIEW

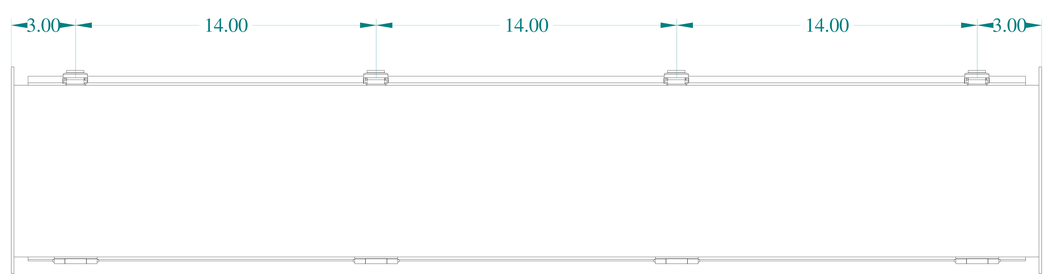

BOTTOM VIEW

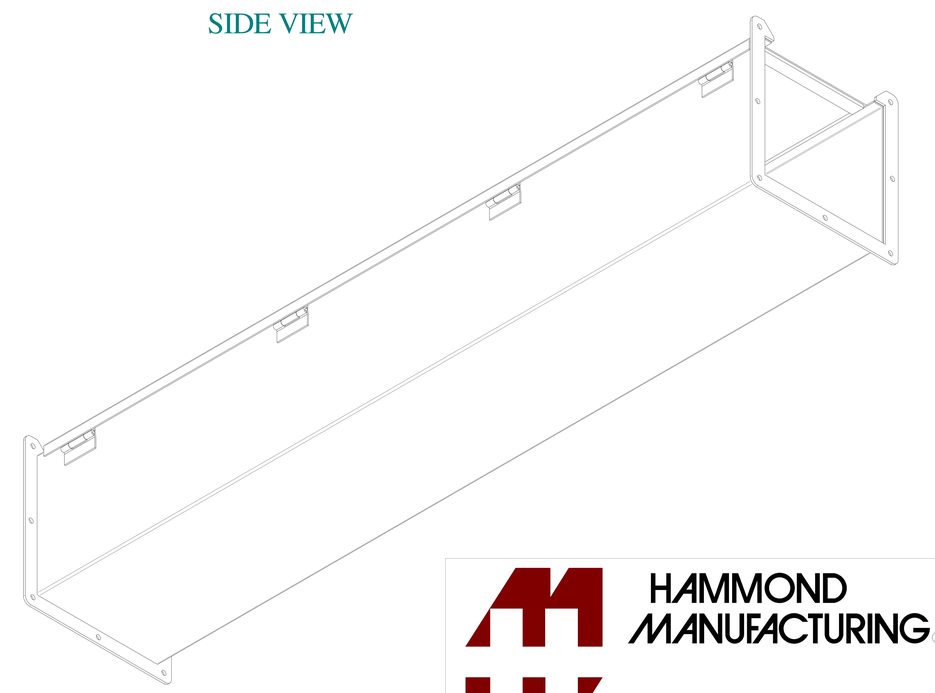

HAMMOND MANUFACTURING®

www.hammondmfg.com

Data subject to change without notice.

Part # : 1485E48	Date : Mar. 24, 2019

Link:www.hammfg.com/1485E48