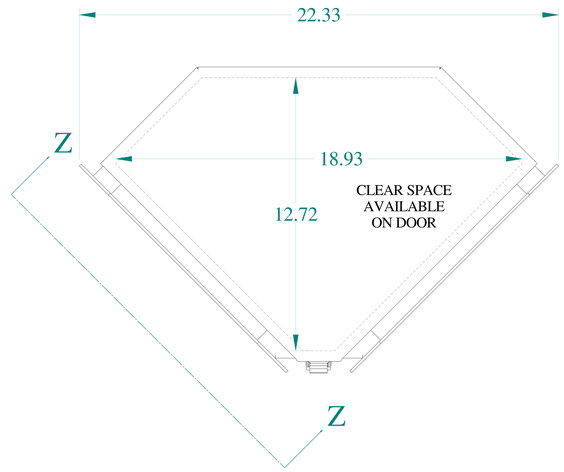

TOP VIEW

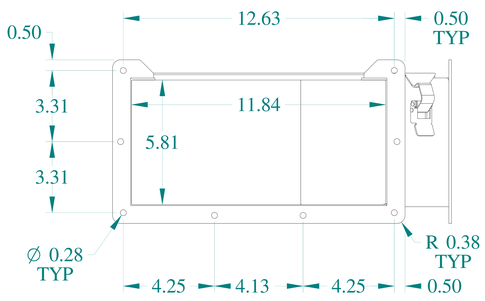

VIEW Z-Z

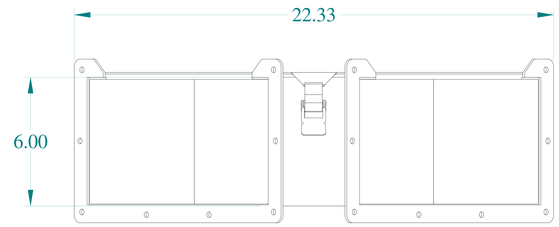

FRONT VIEW

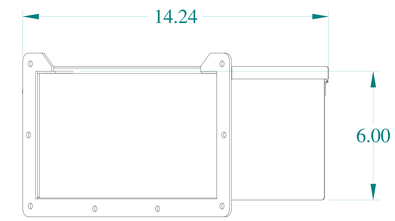

SIDE VIEW

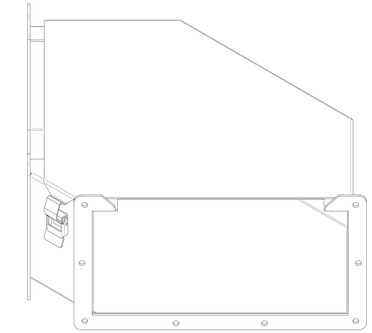

ISOMETRIC VIEWS

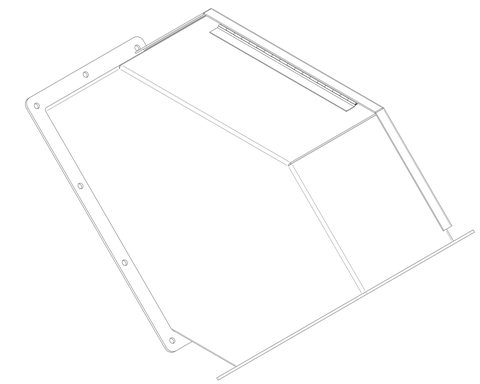

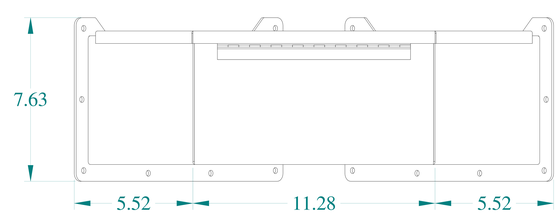

BACK VIEW

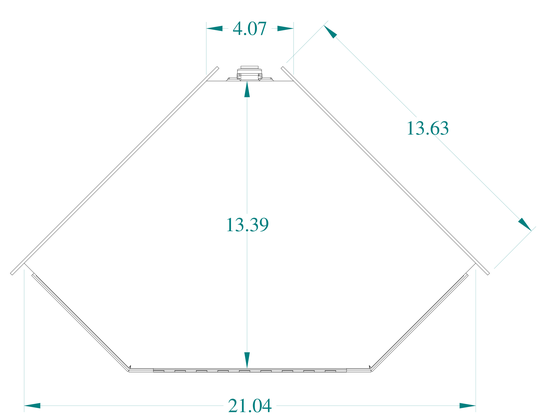

BOTTOM VIEW

HAMMOND MANUFACTURING®

www.hammondmfg.com

Data subject to change without notice.

Part # : 1485F9N	Date : Mar. 24, 2019

Link:www.hammfg.com/1485F9N