TOP VIEW

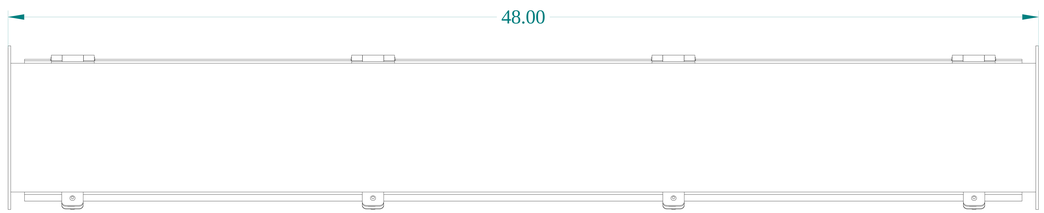

BACK VIEW

SIDE VIEW

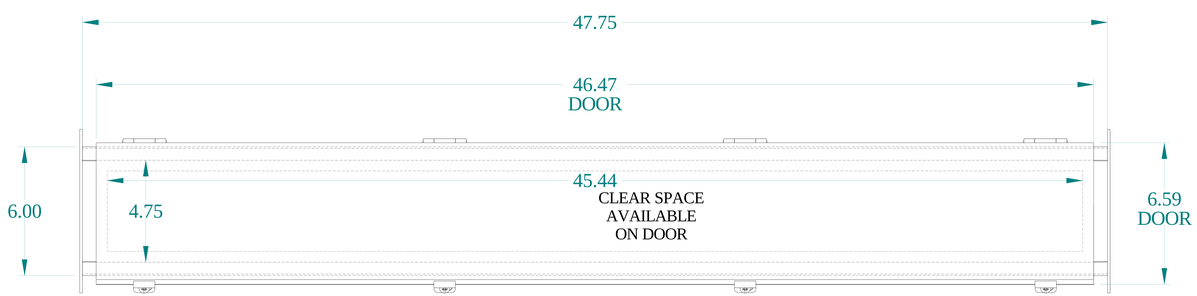

FRONT VIEW

BOTTOM VIEW

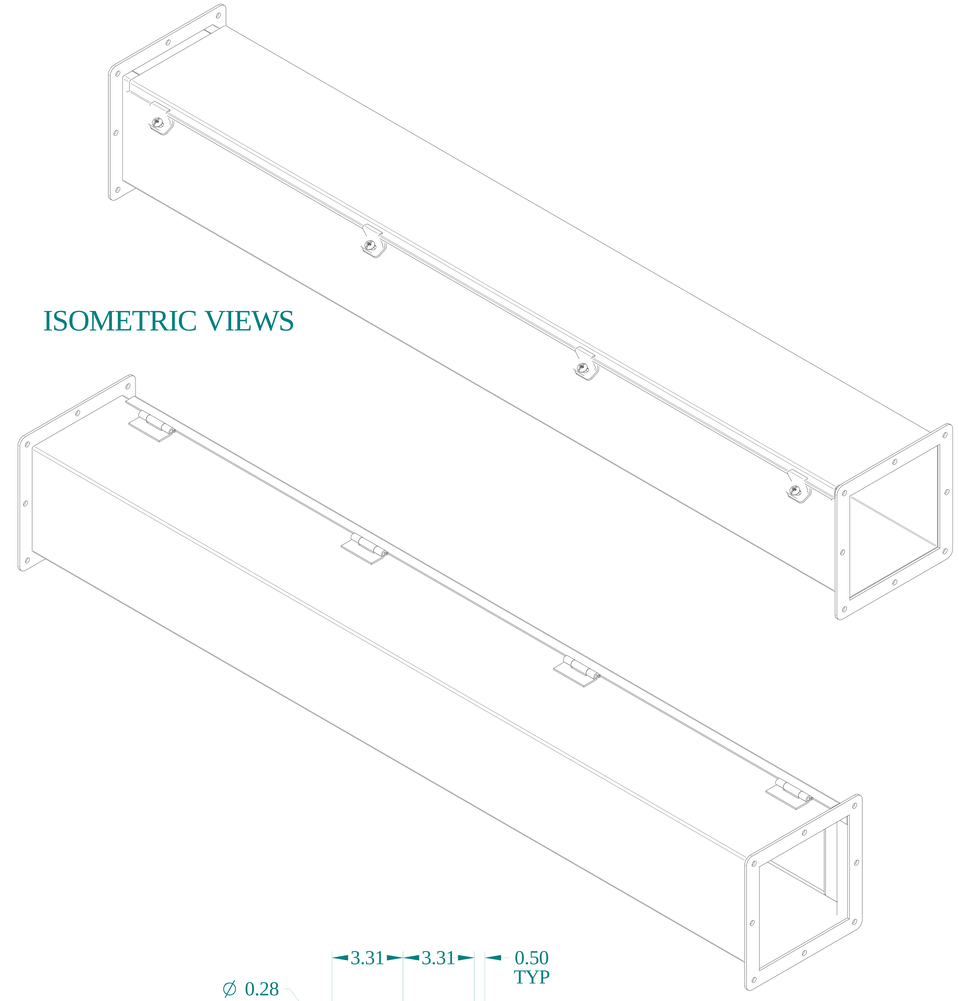

ISOMETRIC VIEWS

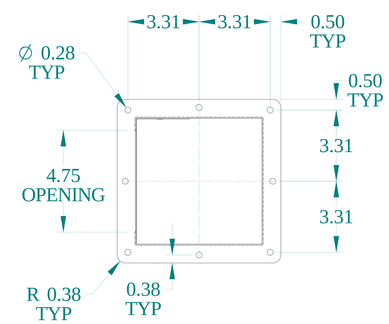

SIDE VIEW

HAMMOND MANUFACTURING®

www.hammondmfg.com

Data subject to change without notice.

Part # : 1487D48	Date : Mar. 13, 2023

Link:www.hammfg.com/1487D48