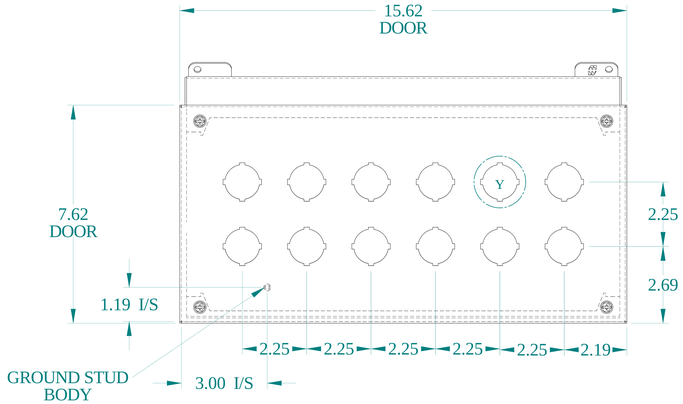

VIEW Z-Z

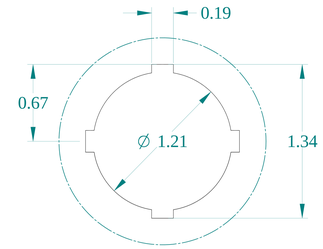

DETAIL Y
TYP

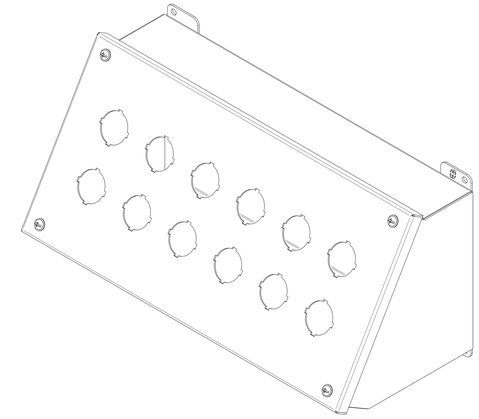

ISOMETRIC VIEWS

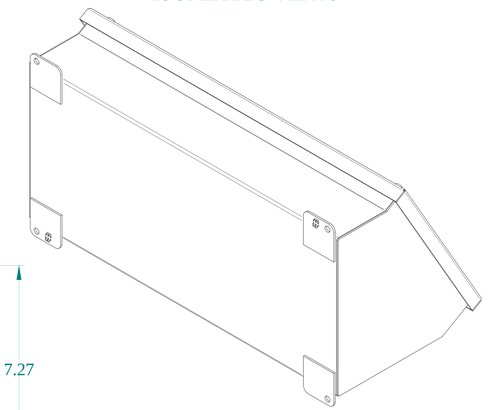

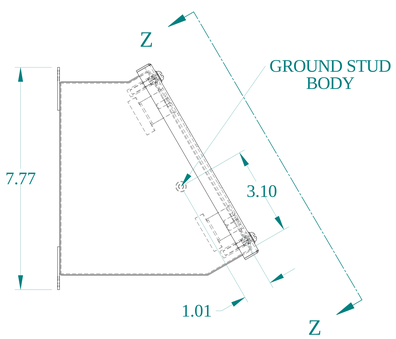

SIDE VIEW

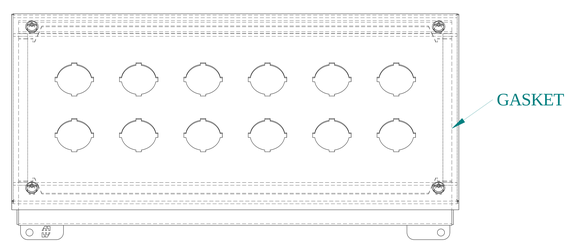

FRONT VIEW

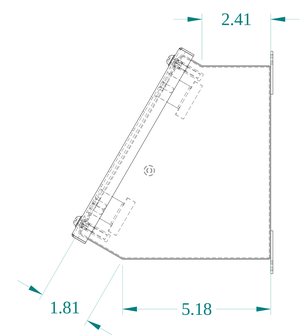

SIDE VIEW

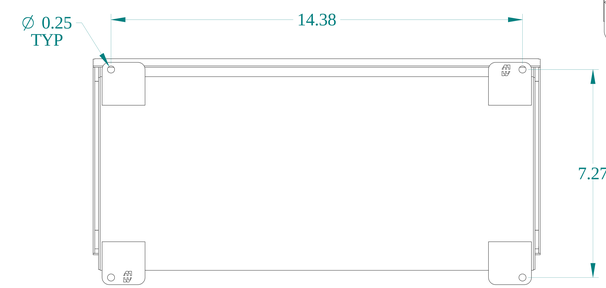

BACK VIEW

BOTTOM VIEW

HAMMOND MANUFACTURING®

www.hammondmfg.com

Data subject to change without notice.

Part # : 1490G12	Date : Apr. 9, 2025

Link:www.hammfg.com/1490G12