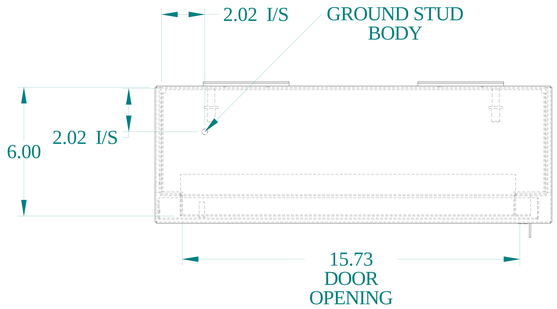


TOP VIEW

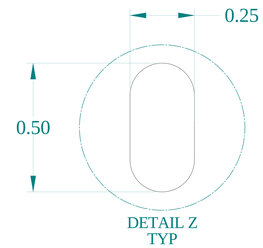


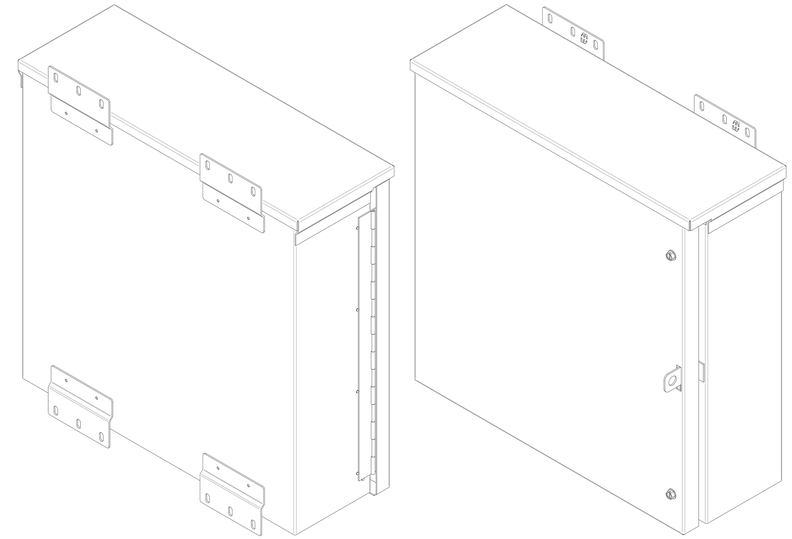

ISOMETRIC VIEWS

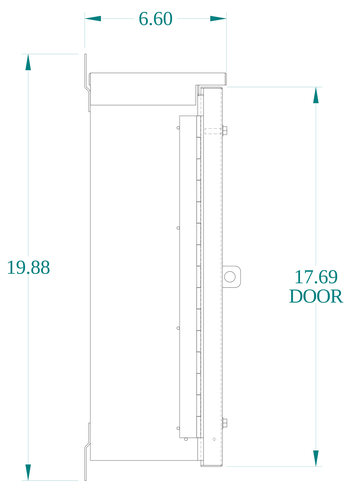


SIDE VIEW

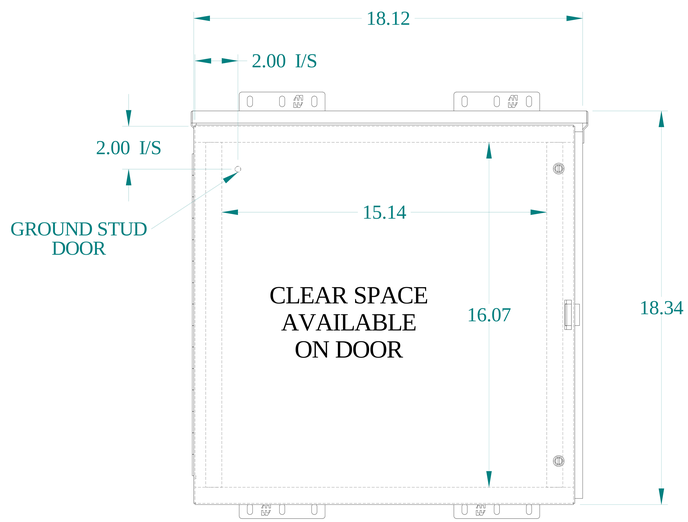


FRONT VIEW

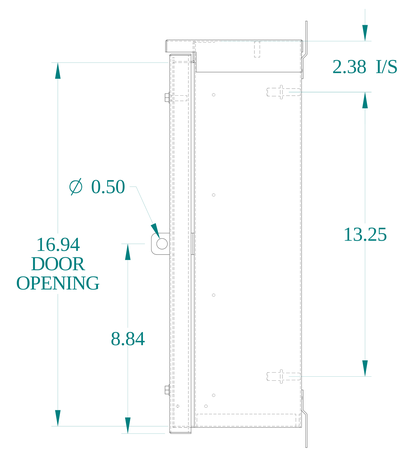


SIDE VIEW

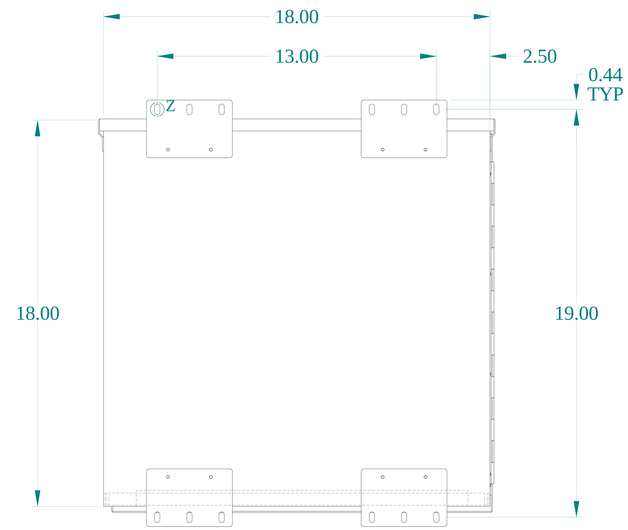


BACK VIEW

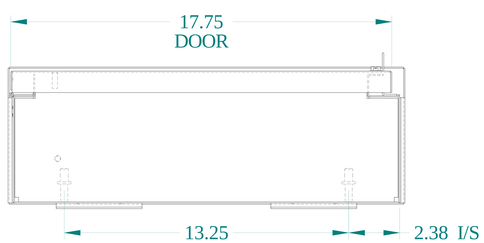


BOTTOM VIEW

HAMMOND MANUFACTURING®

www.hammondmfg.com

Data subject to change without notice.

| | |
|---|---|
| Part # : C3R18186HCR | Date : Aug. 29, 2025 |

Link:www.hammfg.com/C3R18186HCR