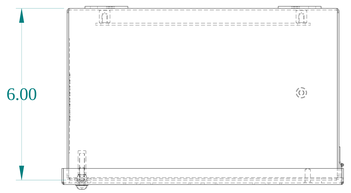


TOP VIEW

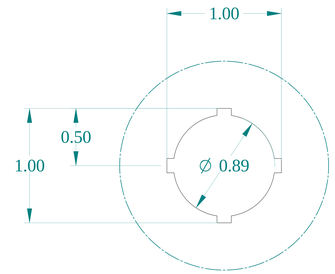


DETAIL Z
TYP

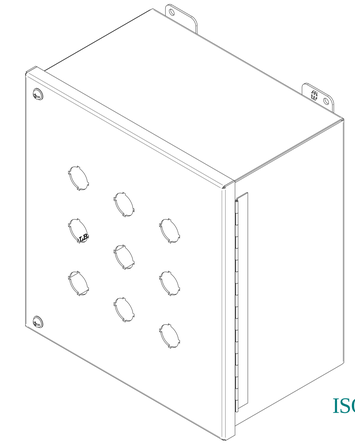

ISOMETRIC VIEWS

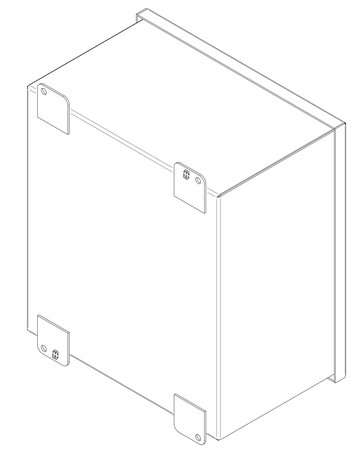

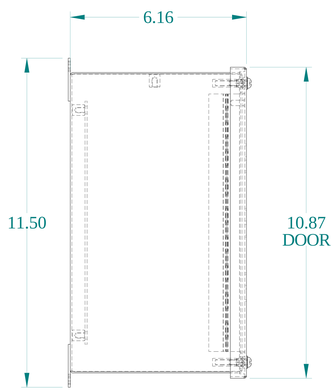


SIDE VIEW

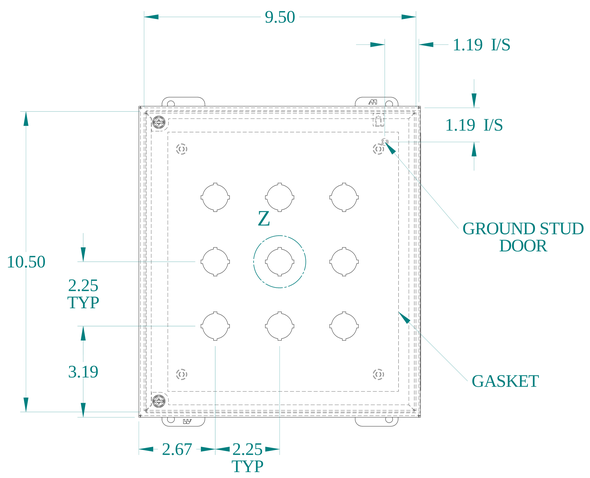


FRONT VIEW

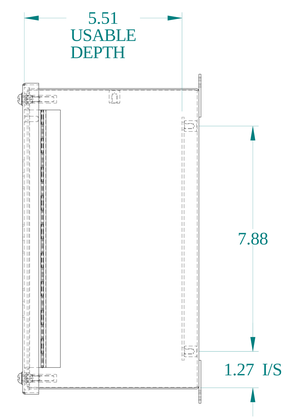


SIDE VIEW

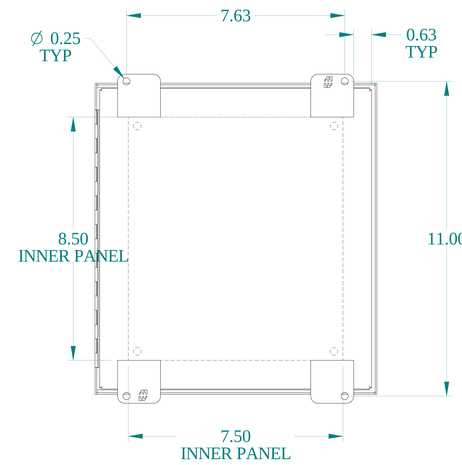


BACK VIEW

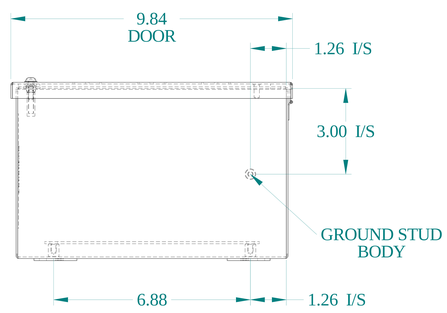


BOTTOM VIEW

HAMMOND MANUFACTURING®

www.hammondmfg.com

Data subject to change without notice.

| | |
|---|---|
| Part # : 1489MP9 | Date : Apr. 17, 2025 |

Link:www.hammfg.com/1489MP9