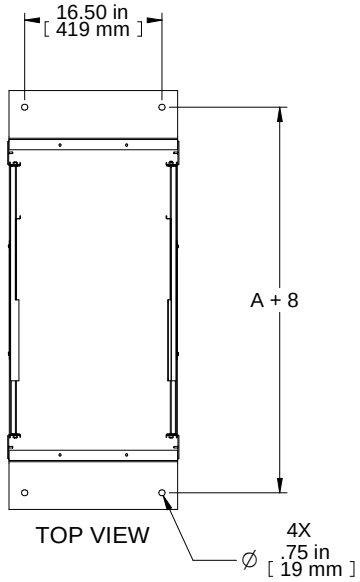

TOP VIEW

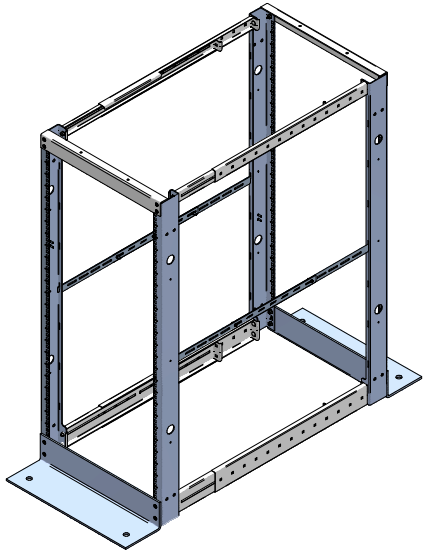

ISOMETRIC
FEET OUT
(EXTENDED)

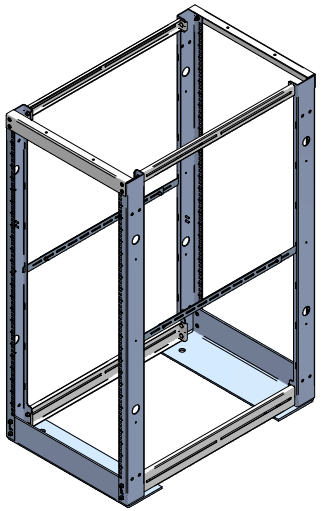

ISOMETRIC
FEET IN

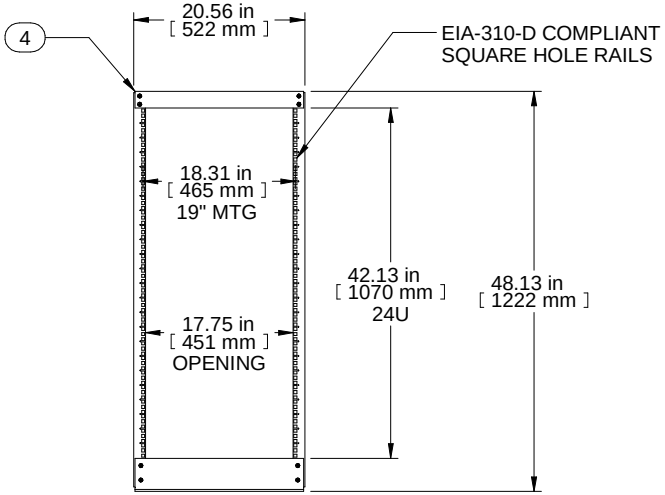

FRONT VIEW

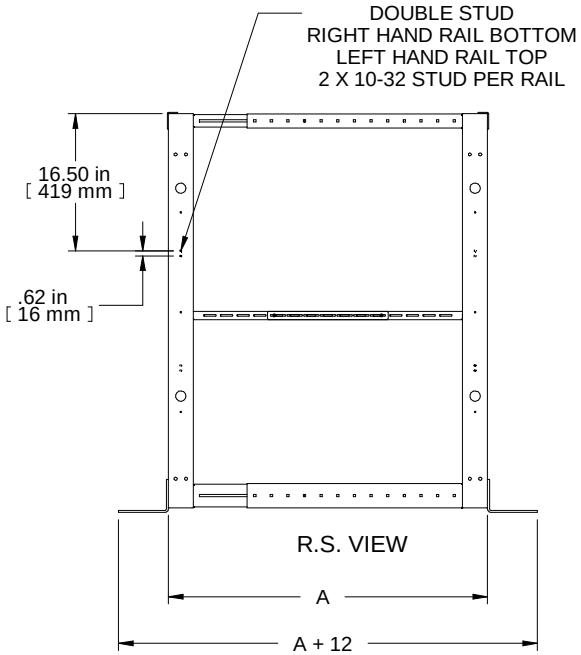

R.S. VIEW

PART NO.	A (DEPTH)
DC4R2448	32" - 48"

NOTE: DIM "A" (DEPTH) IS FULLY ADJUSTABLE

PART NUMBERS	
DC4R24	PAINTED BLACK THIN FILM

NOTES

- Shipped Knockdown for Handling and Protection
- Self-Centering Hardware Included for Ease of Assembly
- Ships with 50 Pack of Cage Nuts and Screws
- See Hammond Website for More Information

Français

Pour tous les détails sur nos produits,
svp veuillez consulter notre site www.hammondmfg.com

Data subject to change without notice. Isometric drawing not to scale.
Les données sont sujettes à changement sans préavis.

RoHS

HAMMOND MANUFACTURING®

www.hammondmfg.com

PART NO. DC4R2448