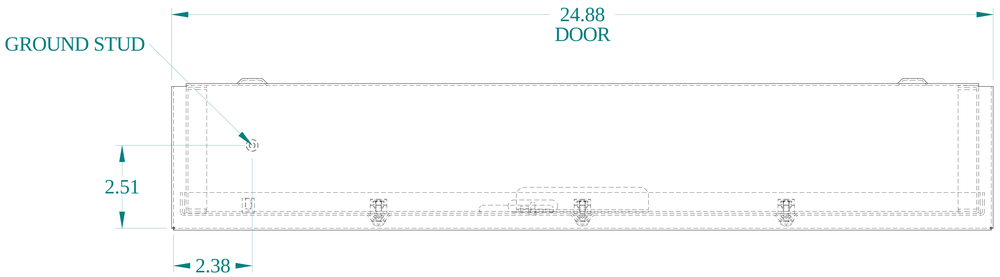

TOP VIEW

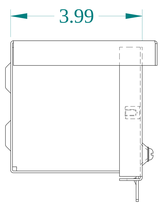

SIDE VIEW

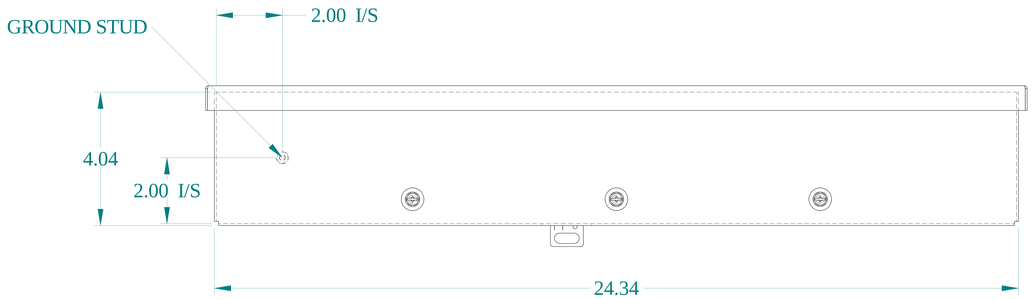

FRONT VIEW

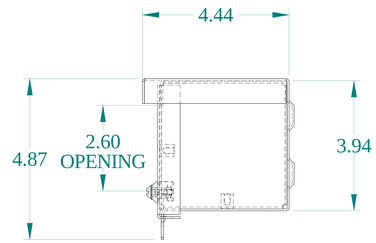

SIDE VIEW

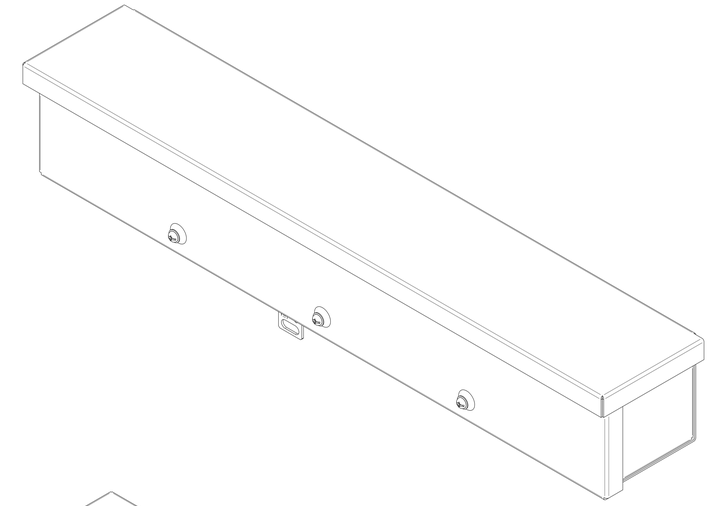

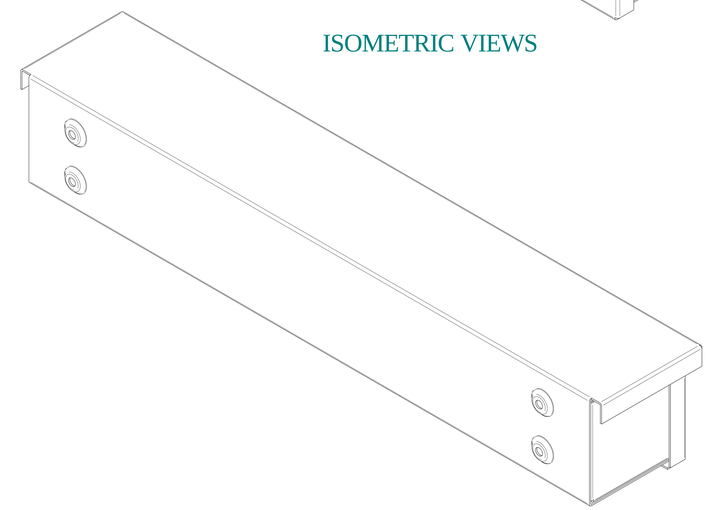

ISOMETRIC VIEWS

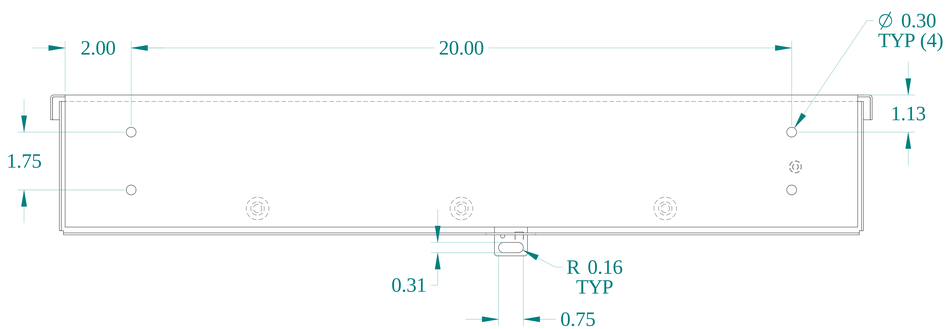

BACK VIEW

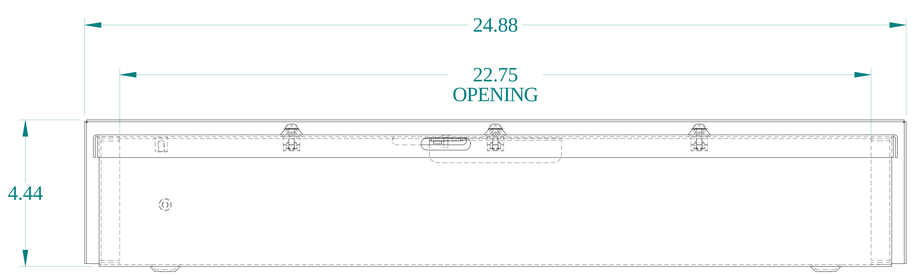

BOTTOM VIEW

HAMMOND MANUFACTURING®

www.hammondmfg.com

Data subject to change without notice.

Part # : C3RWT424	Date : Jun. 18, 2024

Link:www.hammfg.com/C3RWT424