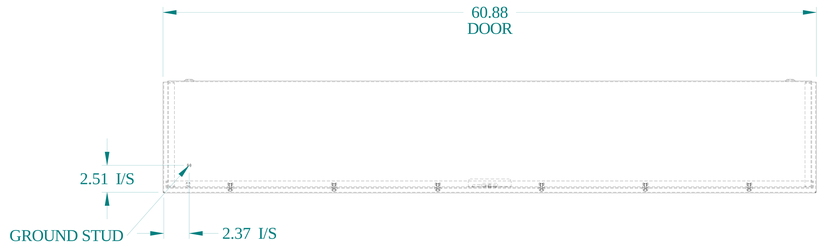


TOP VIEW

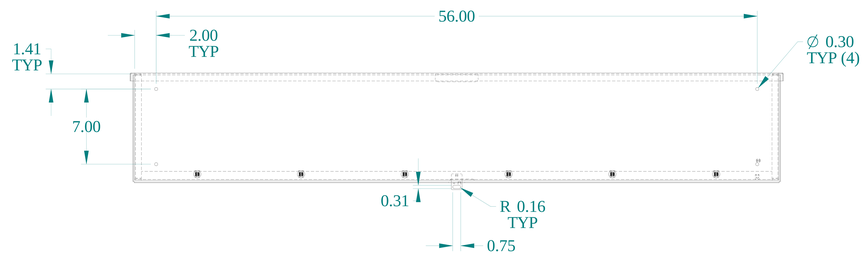


BACK VIEW

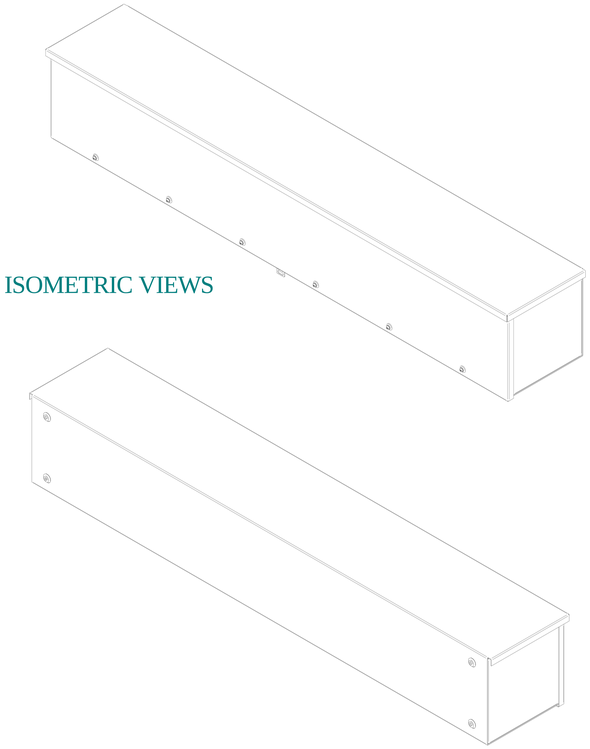

ISOMETRIC VIEWS

SIDE VIEW

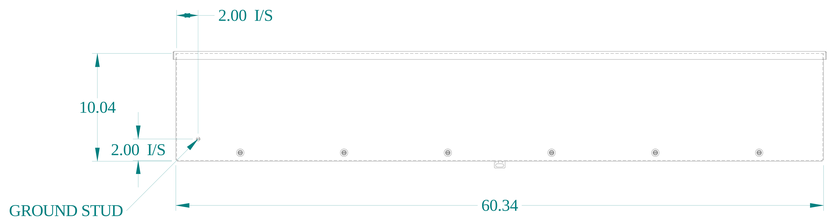


FRONT VIEW

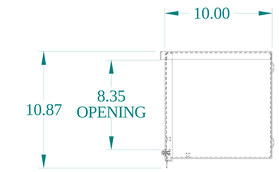


SIDE VIEW

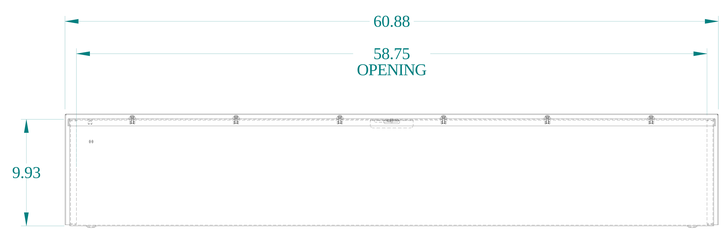


BOTTOM VIEW

HAMMOND MANUFACTURING®

www.hammondmfg.com

Data subject to change without notice.

| | |
|---|---|
| Part # : C3RWT1060 | Date : Jun. 18, 2024 |

Link:www.hammfg.com/C3RWT1060