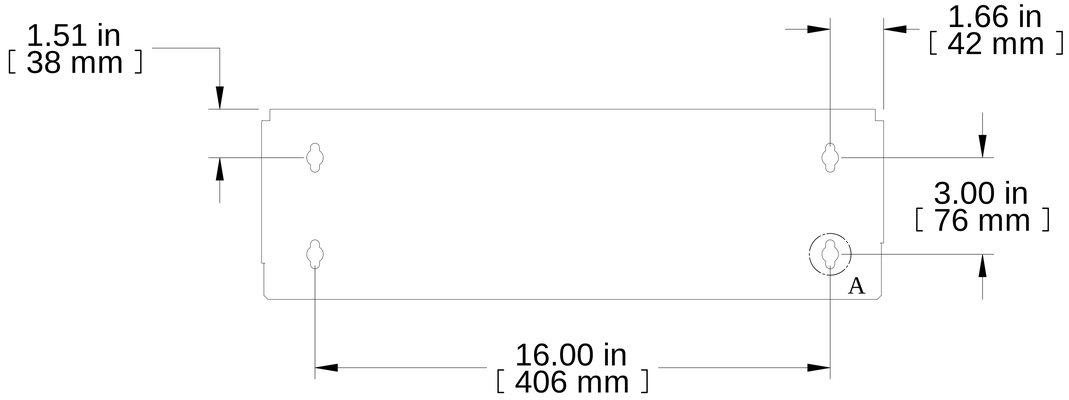


TOP VIEW

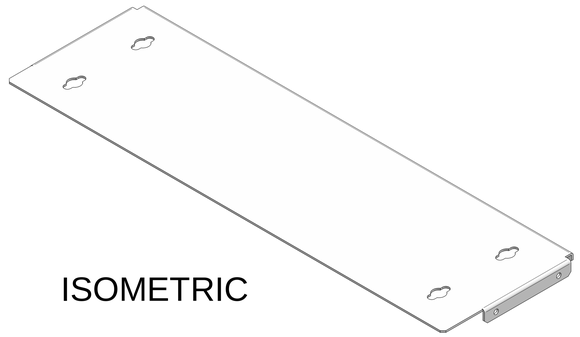

ISOMETRIC

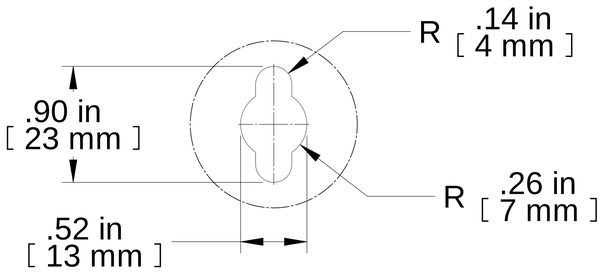


DETAIL A

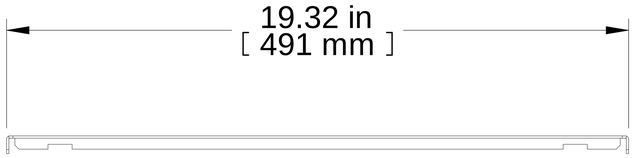


FRONT VIEW

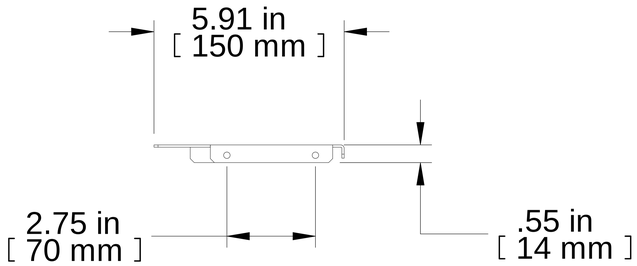


R.S. VIEW

| PART NUMBERS | |
|---|---|
| PBCOVER | PAINTED BLACK SMOOTH |

**NOTES**

Does Not Include Wall Mounting Hardware
Bracket Mounting Hardware Included
See Hammond Website for More Information

**Français**

Pour tous les détails sur nos produits,
svp veuillez consulter notre site www.hammondmfg.com

Data subject to change without notice. Isometric drawing not to scale.
Les données sont sujettes à changement sans préavis.

HAMMOND MANUFACTURING®

www.hammondmfg.com

PART NO. **PBCOVER**