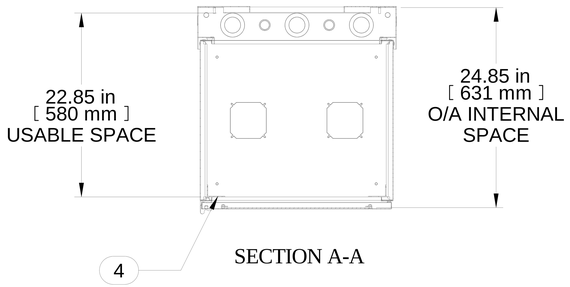

SECTION A-A

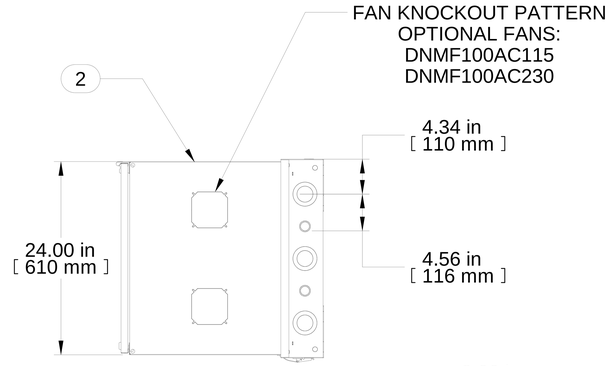

TOP VIEW

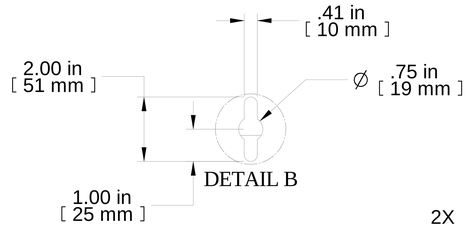

DETAIL B

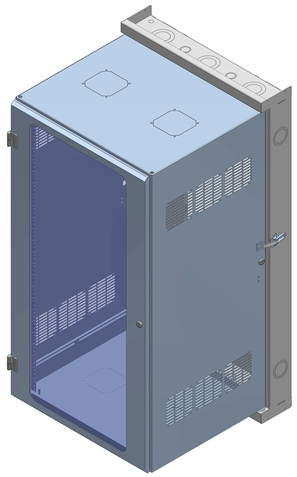

ISOMETRIC

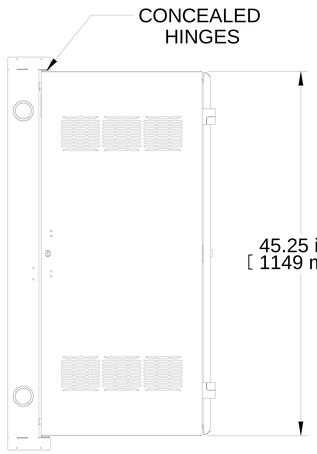

L.S. VIEW

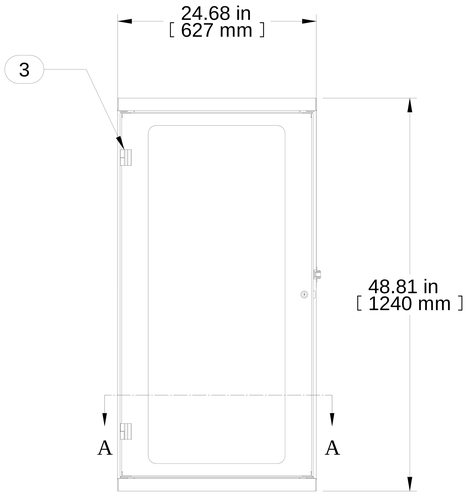

FRONT VIEW

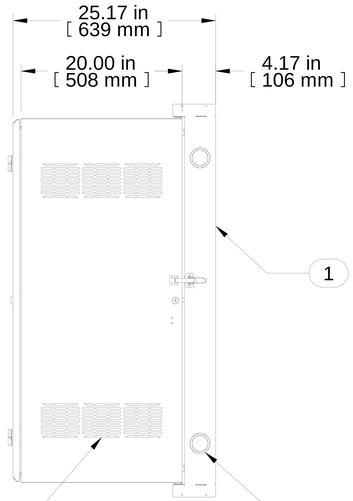

R.S. VIEW

FAN CUTOUT PATTERN
OPTIONAL FANS:
DNMF100AC115
DNMF100AC230

2X
DOUBLE K.O.
∅2.00/∅2.50
BOTH SIDES

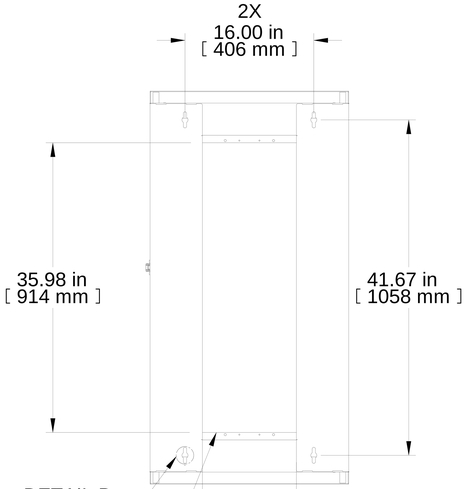

REAR VEW

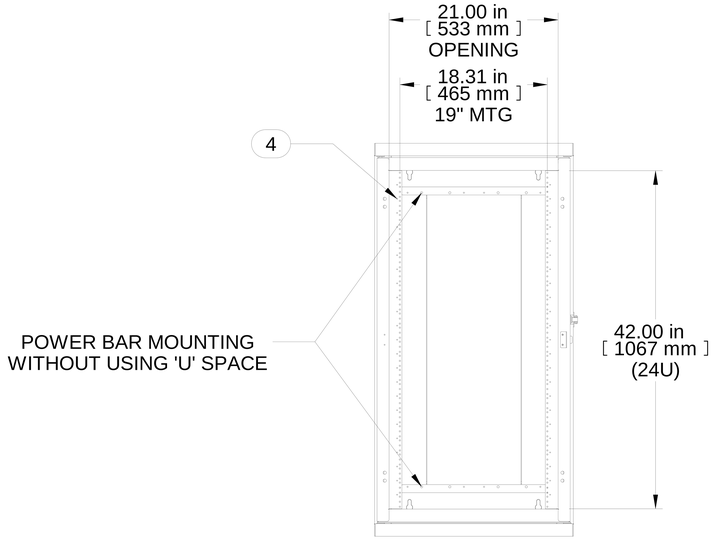

FRONT VIEW
DOOR REMOVED

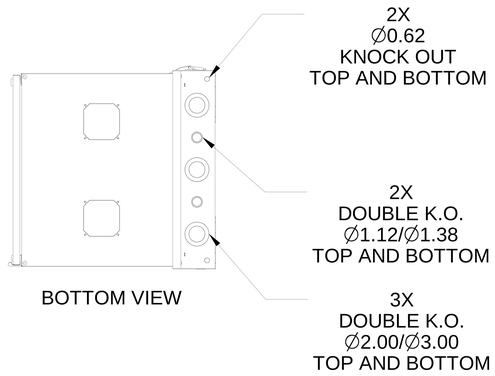

BOTTOM VIEW

Item Number	Title	Quantity
1	HWM REAR SECTION 24W 24U	1
2	HWM - CENTRE SECTION	1
3	HWM - WINDOW DOOR ASSY (24U)	1
4	19" TAPPED PANEL RAILS (PAIR)	1
6	HWM PIN STOP BRAKET	1

PART NUMBERS

HWM2424U20WDBK	PAINTED BLACK TEXTURED
	WINDOW FRONT DOOR

NOTES

See Hammond Website for Additional Accessories

Français

Pour tous les détails sur nos produits,
svp veuillez consulter notre site www.hammondmfg.com
Data subject to change without notice. Isometric drawing not to scale.
Les données sont sujettes à changement sans préavis.

HAMMOND MANUFACTURING®

www.hammondmfg.com

PART NO. **HWM2424U20WDBK**