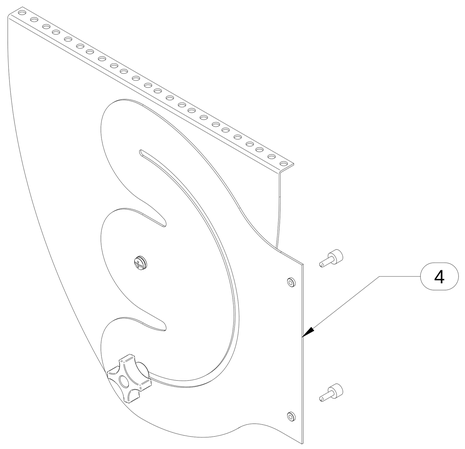

ROTATING RAIL ASSEMBLY
2:1

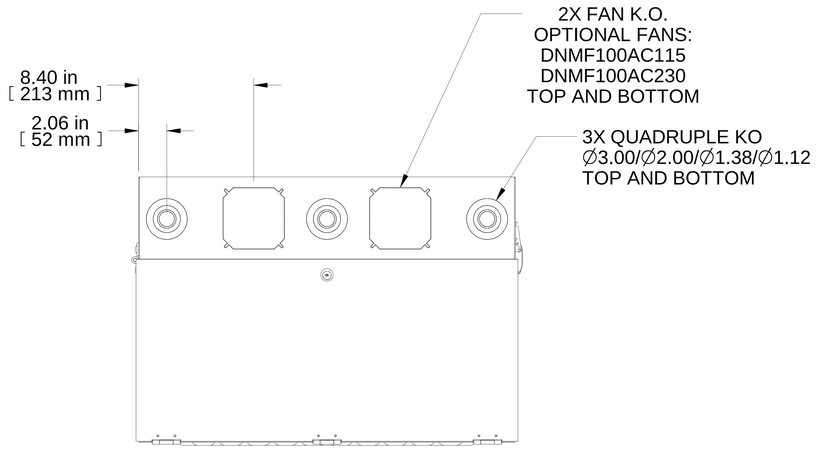

TOP VIEW

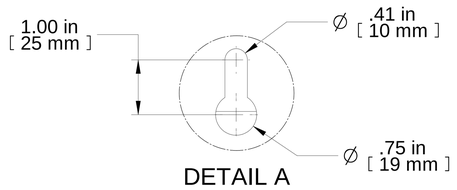

DETAIL A
4:1

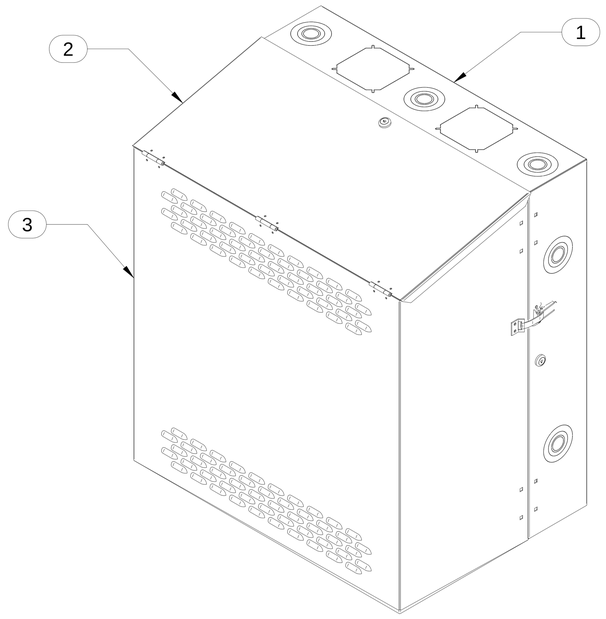

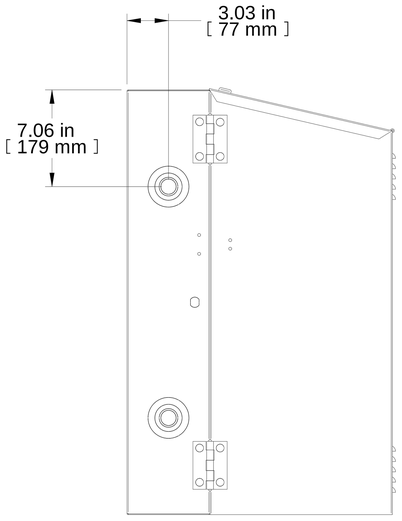

L.S. VIEW

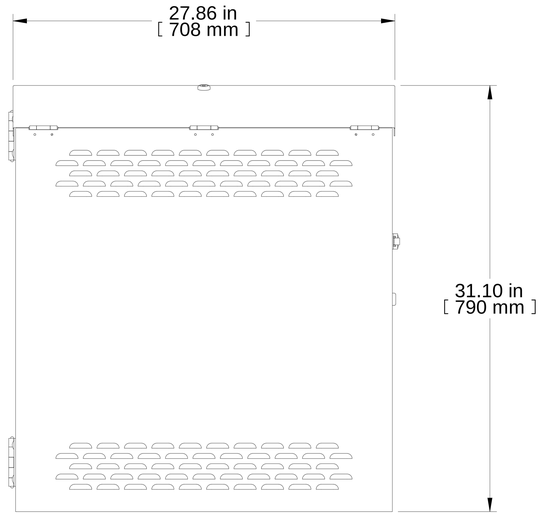

FRONT VIEW

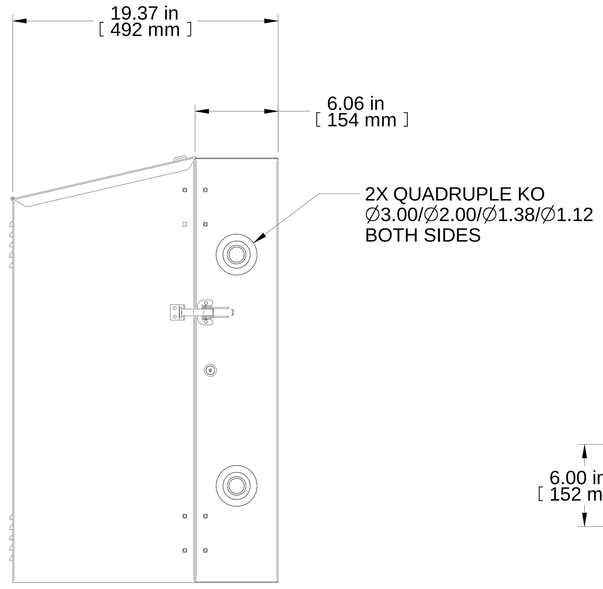

R.S. VIEW

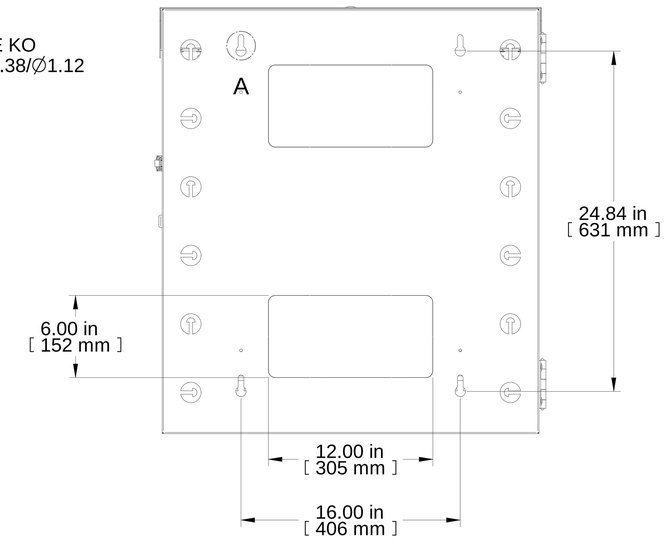

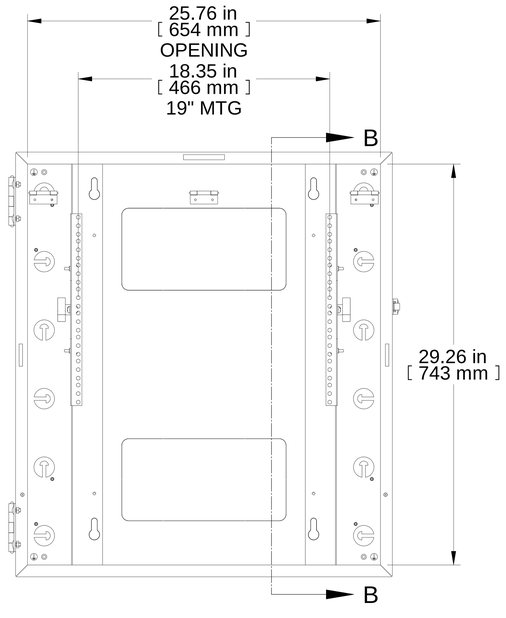

FRONT VIEW
DOOR REMOVED

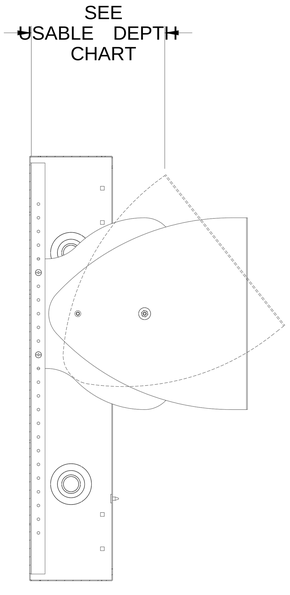

SECTION B-B

Item Number	Title	Quantity
1	HLP - REAR SECTION	1
2	HLP - LID	1
3	HLP - FRONT SECTION	1
4	ROATATING BRACKET	2
5	ROTATING RAIL	2
6	WASHER FLAT 3/8 IN SS.	2

PART NUMBERS	
HLP8UBK	PAINTED BLACK TEXTURED

NOTES

Louvered Front Door
Wall Mounting Hardware Not Included
See Hammond Website for More Information

Français

Pour tous les détails sur nos produits,
svp veuillez consulter notre site www.hammondmfg.com

Data subject to change without notice. Isometric drawing not to scale.
Les données sont sujettes à changement sans préavis.

HAMMOND MANUFACTURING®
www.hammondmfg.com

PART NO. **HLP8UBK**

USABLE MOUNTING DEPTH	
POSITION	**DEPTH**
VERTICAL	29.00
HORIZONTAL	15.50
ROTATING	12.00