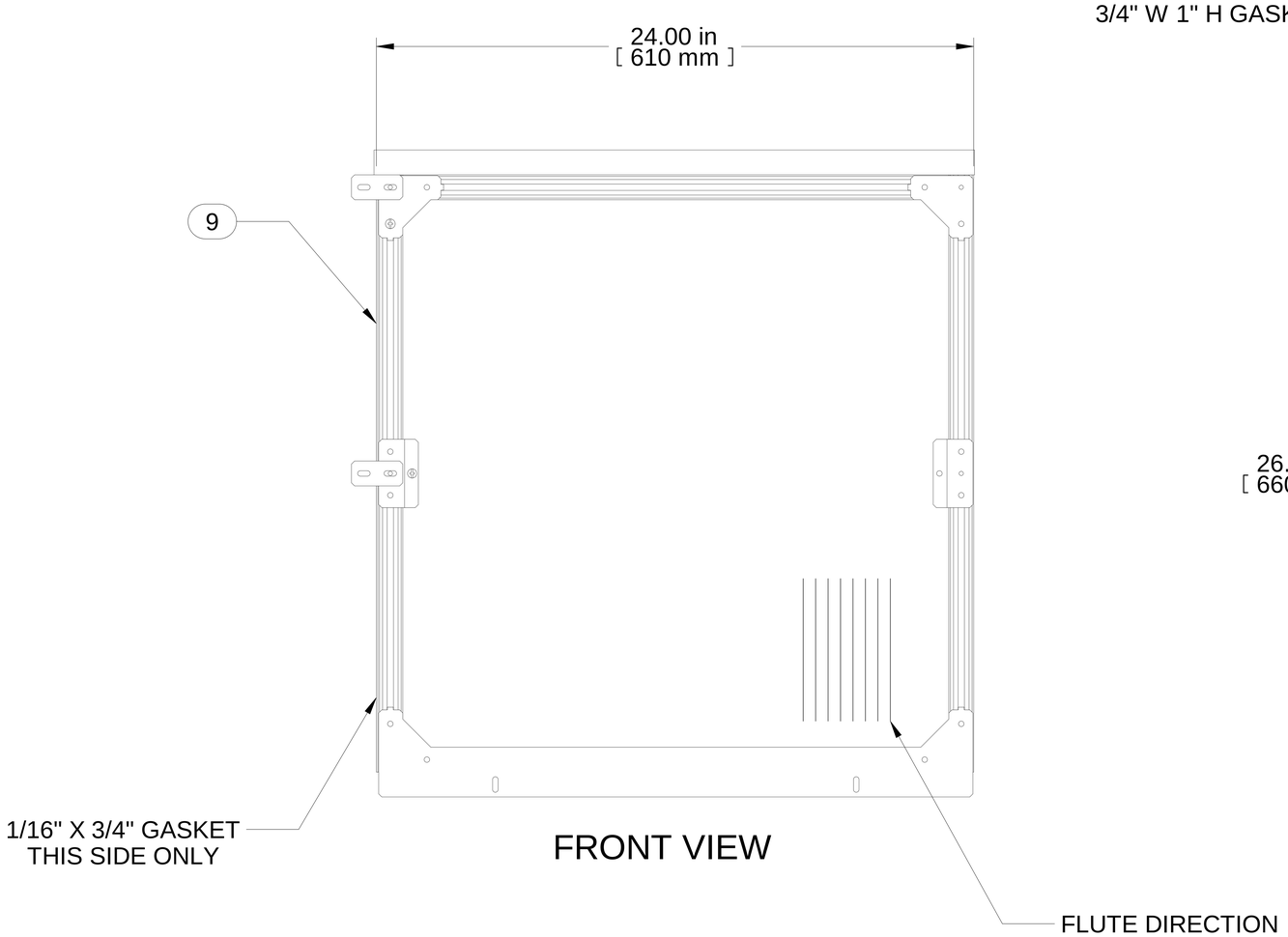

FRONT VIEW

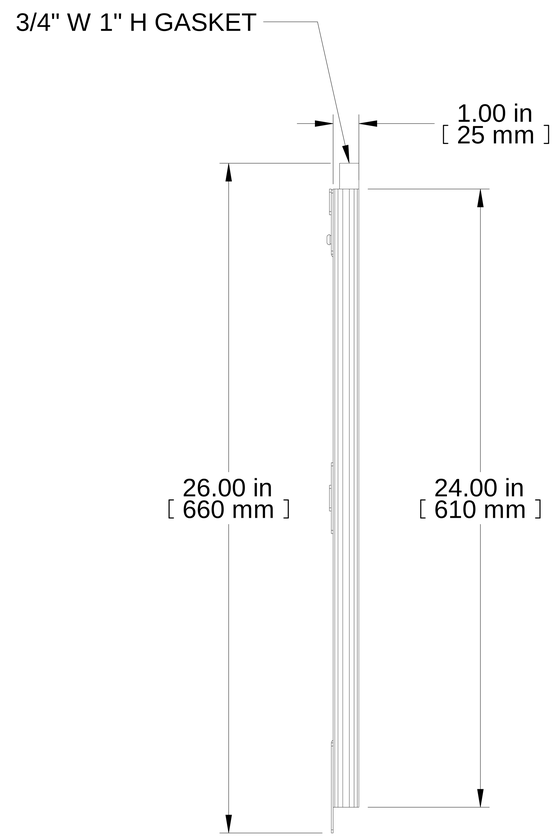

R.S. VIEW

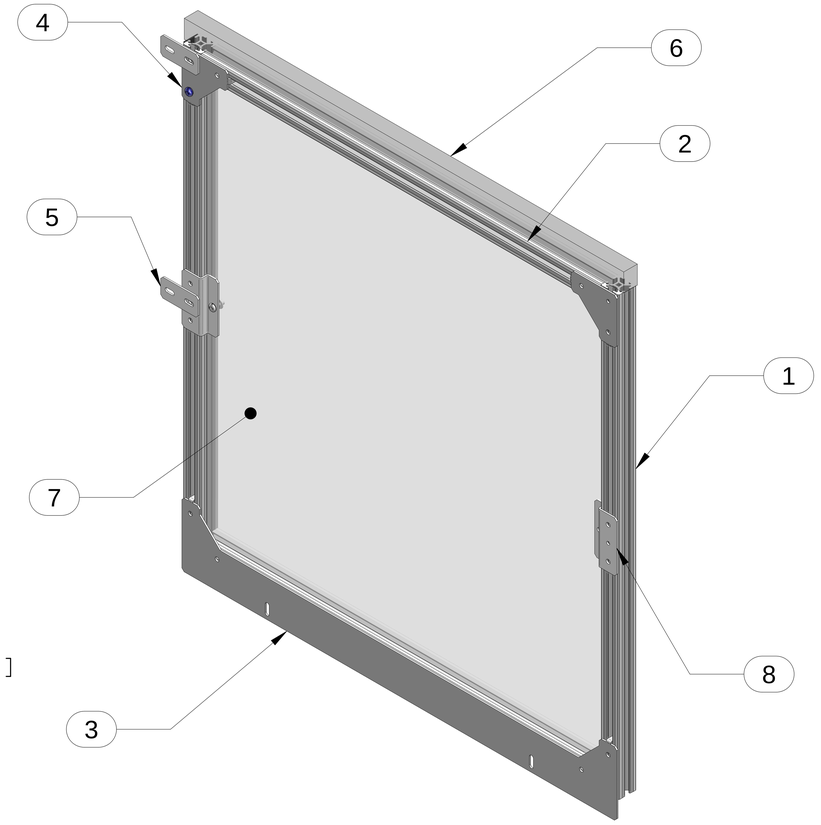

ISOMETRIC

Item Number	Title	Quantity
1	SIDE ALUM EXT	2
2	TOP/BOTTOM ALUM EXT	2
3	CS PANEL MOUNTING BRACKET 24"W	1
4	CS PANEL CORNER BRACKET	2
5	CS PANEL JOINER PLATE	2
6	FOAM GASKET - 0.75" X 1.00"	1
7	CS PANEL CORR POLY CARB INSERT	1
8	CS PANEL MID SUPPORT BRKT	2
9	GSK.MONARCH 1/16X3/4 NEO.	1

PART NUMBERS

HCS-TAP-2424 EXTRUDED ALUMINUM FRAME

NOTES

Designed for 24" Wide Cabinet

Multi-Wall Polycarbonate Panel Fire Rated to CAN/ULC-S102.2

Gasket Material Fire Rated to UL94HF1

Mounting Hardware Included

See Hammond Website for More Information

Français

Pour tous les détails sur nos produits,
svp veuillez consulter notre site www.hammondmfg.com

Data subject to change without notice. Isometric drawing not to scale.
Les données sont sujettes à changement sans préavis.

HAMMOND MANUFACTURING®

www.hammondmfg.com

PART NO. HCS-TAP-2424