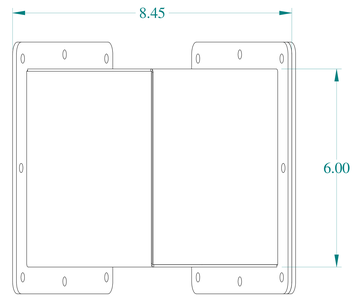


TOP VIEW

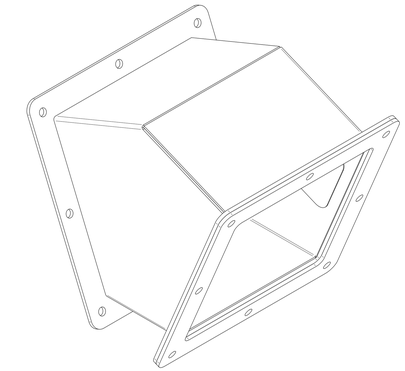

ISOMETRIC VIEWS

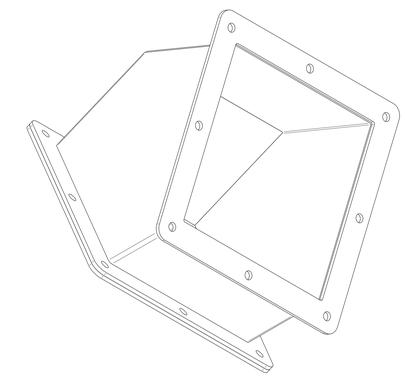

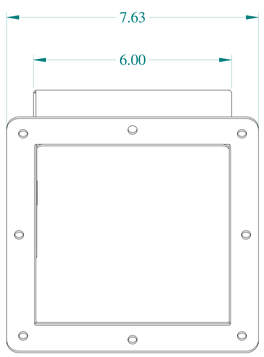


SIDE VIEW

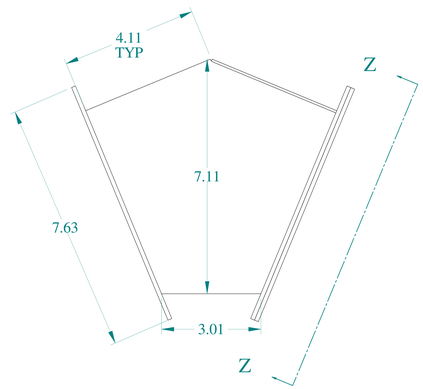


FRONT VIEW

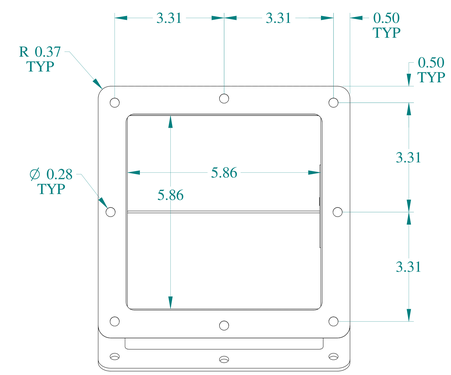


VIEW Z-Z

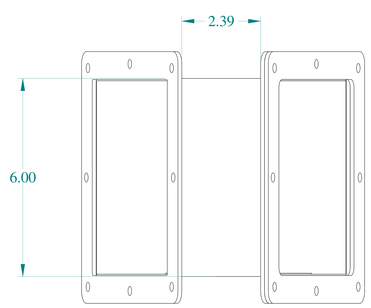


BOTTOM VIEW

HAMMOND MANUFACTURING®

www.hammondmfg.com

Data subject to change without notice.

| | |
|---|---|
| Part # : 1487D4PSS | Date : Mar. 22, 2019 |

Link:www.hammfg.com/1487D4PSS